Site Improvement Plan for the Boy Scout Property, Laughlin, Nevada

Prepared for:

Nevada Division of State Parks
P.O. Box 32850
Laughlin, Nevada 89028

Nevada Department of Wildlife
4747 Vegas Drive
Las Vegas, Nevada 89108

Bureau of Reclamation
Lower Colorado River Multi-Species Conservation Program Office
P.O. Box 61470 (LC-8451)
Boulder City, Nevada 89006

Prepared by:

Seth A. Shanahan
Southern Nevada Water Authority
100 City Parkway, Suite 700
Las Vegas, NV 89106

August 2009

Acknowledgements

I would like to thank the following people for their creative ideas and input (both past and present) because this information has substantially improved this Site Improvement Plan. Alan Conklin, Randy Moore, David Morrow, Allen Newberry, Terry Hansen, and Steve Weaver from the Nevada Division of State Parks; Jed Blake and Rick Sweat from the Bureau of Reclamation; Jon Sjoberg and Cris Tomlinson from the Nevada Department of Wildlife; Holly Cheong, Keiba Crear, Jason Eckberg, Patty Emery, Eric Dano, Bruce Moore, Nick Rice, and Bill Rinne from the Southern Nevada Water Authority; Giles Anthony form Native Resources of Nevada; Gary Lewis from the Boy Scouts of America; Fred Phillips from Fred Phillips Consulting; and Ken Lair.

Site Improvement Plan for the Boy Scout Property, Laughlin, Nevada

Table of Contents

Page No.

Table of Contents ..... *i*

List of Figures ..... *ii*

List of Appendices ..... *ii*

1.0 INTRODUCTION 1

1.1 Stakeholder Roles and Responsibilities 1
1.2 Project Goals 3

2.0 PROJECT SETTING 4

2.1 Site Location 4
2.2 Site Condition 4
2.2.1 Vegetation, Soils, and Wildlife 4
2.2.2 Facilities and Miscellaneous 6

3.0 IMPROVEMENT PLAN 8

3.1 Facilities 8
3.1.1 Trailhead 8
3.1.2 Trails 10
3.1.3 Benches and Viewing/Interpretive Areas 12
3.2 Vegetation 13
3.2.1 Clearing 14
3.2.2 Irrigation 14
3.2.3 Planting 17
3.3 Trash/Debris Removal 19
3.4 Permits 19
3.5 Public Involvement 19

4.0 MAINTENANCE AND MONITORING 20

4.1 Maintenance 20
4.1.1 Vegetation Improvements 20
4.1.2 Trash, Trails, and Other Facilities 21
4.2 Monitoring 21

Page No.

4.2.1 Vegetation 21
4.2.1.1 Plant Survivorship and Condition 21
4.2.1.2 Cover 22
4.2.1.3 Repeat Photography 22

5.0 BUDGET, SCHEDULE, AND ADDITIONAL FUNDING NEEDS 22

6.0 LITERATURE CITED 25

List of Figures

Figure 1. Location and ownership of the Boy Scout Property and surrounding areas (Note: Clark County's parcel ownership boundary as shown on this figure is not correct; it does not match real property records) 2
Figure 2. Environmental conditions on the Boy Scout Property 5
Figure 3. Existing facilities on the Boy Scout Property 7
Figure 4. Conceptual trailhead design 9
Figure 5. HB1-P trash bin from BearSaver 10
Figure 6. Trails design 11
Figure 7. Metal sign donated to SNWA from State Parks 12
Figure 8. Information panels that were constructed at a kiosk along the Las Vegas Wash, Nevada are used extensively for outreach events 13
Figure 9. Examples of bird blinds/viewing towers 13
Figure 10. Planting layout and irrigation design 16
Figure 11. Illustration of the "deep" planting technique (see Appendix E) 18
Figure 12. Schedule and budget for the Boy Scout Property (Phase I and II budget totals are highlighted in red) 24

List of Appendices

Appendix A Soil Conductance Contours for the Boy Scout Property
Appendix B Depth to Water Contours for the Boy Scout Property
Appendix C Field Notes from the Bureau of Reclamation for Two Groundwater Wells
Appendix D Design and Construction Specifications from Republic Services of Nevada to Build a 3 Yard Trash Enclosure
Appendix E Cost Estimate from the Bureau of Reclamation to Mechanically Clear the Boy Scout Property
Appendix F Guidelines for Planting Longstem Transplants for Riparian Restoration in the Southwest
Appendix G Product Information for Certa-Lok™ Yelomine™ Restrained Joint PVC Pressure Piping System
Appendix H Product Information for Landscape Dripline

1.0 INTRODUCTION

In December 2005, the Southern Nevada Water Authority (SNWA) purchased an approximately 15 acre parcel of land located south of Laughlin, Nevada. The property (herein referred to as the Boy Scout Property; Figure 1) was purchased from the Las Vegas Area Council, Inc. of the Boy Scouts of America by SNWA for habitat restoration purposes. Included as part of the land purchase was a right to ten acre feet of water a year (AFY) from the adjacent Colorado River. In September 2007, SNWA entered into a memorandum of agreement (MOA) with the Nevada Department of Wildlife (NDOW), Nevada Division of State Parks (State Parks), and the Bureau of Reclamation (Reclamation) to potentially develop the Boy Scout Property as a Lower Colorado River Multi-Species Conservation Program (LCR MSCP) Conservation Area. The MOA outlined the signatories' responsibilities to coordinate and collaborate in the development of the Boy Scout Property as a conservation and education/outreach resource. This site improvement plan (SIP) has subsequently been developed to meet that goal.

1.1 Stakeholder Roles and Responsibilities

There are a few important stakeholders that are critical to ensuring that this SIP is successful. These stakeholders and their roles and responsibilities are outlined below. Stakeholder responsibilities primarily include reviewing and commenting on this SIP. Public stakeholders (e.g., the Laughlin Town Advisory Board) are not listed in this section because a specific process to solicit public input has been included in Section 3.4.

Bureau of Reclamation

The Bureau states that "The [Boy Scout Property and associated backwater (Figure 1) are] located within Reach 3 of the LCR MSCP Planning Area (Davis Dam to Parker Dam). The backwater and surrounding area maintains the only self-sustaining population of flannelmouth suckers [(*Catostomus latipinnis*) and since Reach 3] has very few undeveloped backwaters, protection of the existing backwater is a priority for the LCR MSCP. The Colorado River and Reach 3 in particular are experiencing extensive urban development. Protection of the backwater ensures the commitment of adjacent land owners, and controls future development in the surrounding areas. Long-term security of the property [will] also provide protection to the backwater and allow for future restoration activities within the upland area. The dry upland area is planned to be enhanced for education and outreach purposes in concert with protection of the backwater.

Past monitoring efforts have indicated the presence of native fishes in and adjacent to the existing backwater. Successfully securing the site result[s] in 15 acres of backwater habitat credits that benefit flannelmouth sucker, razorback sucker [(*Xyrauchen texanus*)], and bonytail [(*Gila elegans*)] in Reach 3 of the LCR MSCP Planning Area. For current information regarding this conservation area, please see "Work Task E25: Big Bend Conservation Area, [(Reclamation 2008)]."

The role of Reclamation in this project is as an advisor and partner. Because Reclamation needs to ensure that site improvements on the Boy Scout Property do not interfere with the conservation of the backwater area, they are committed to helping project activities be successful.

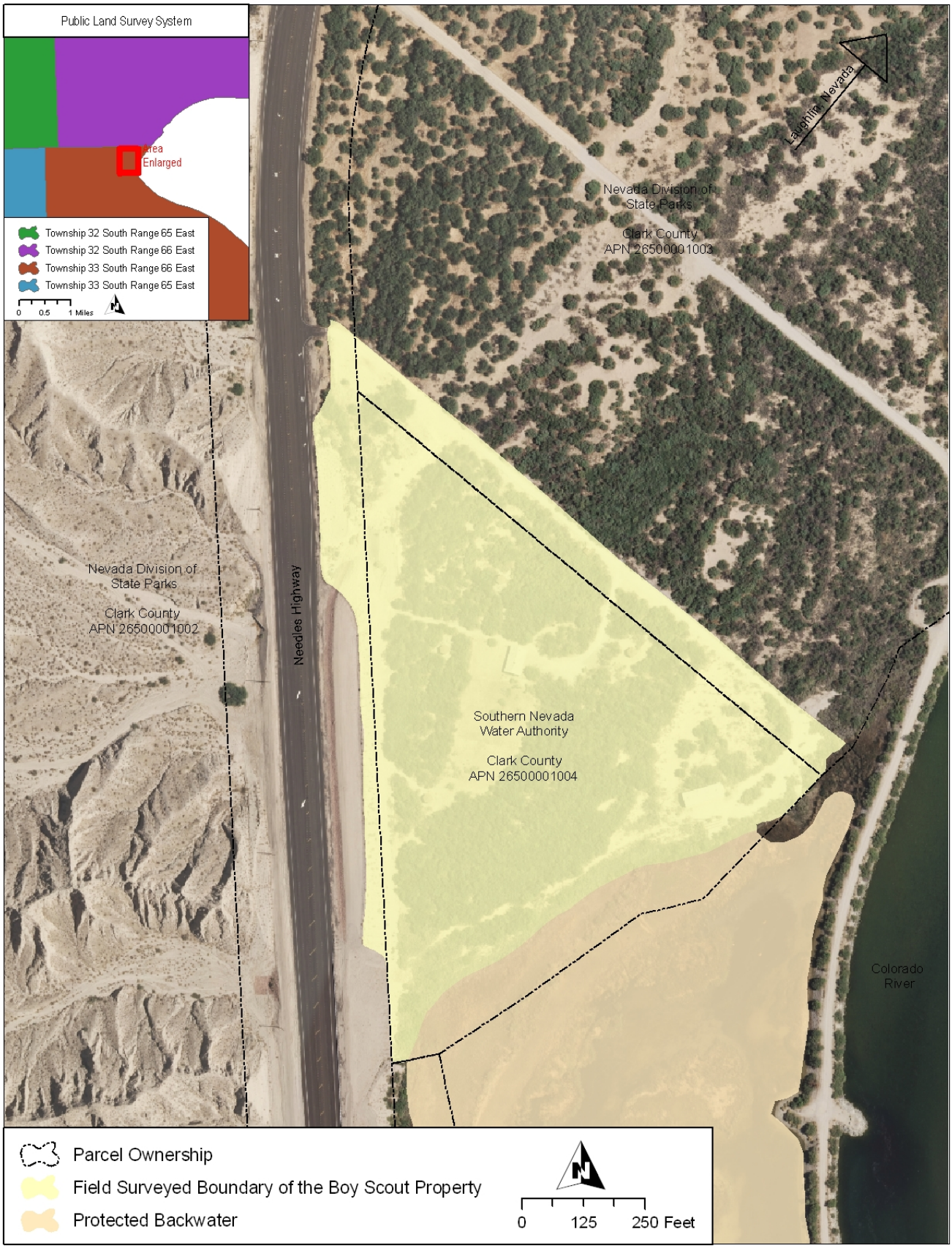

Figure 1: Location and ownership of the Boy Scout Property and surrounding areas (Note: Clark County's parcel ownership boundary as shown on this figure is not correct; it does not match real property records).

Nevada Division of State Parks
The Boy Scout Property is surrounded by Big Bend of the Colorado Recreation Area (herein referred to as Big Bend). State Parks administers Big Bend as a recreation area for wildlife viewing, picnicking, boating, fishing, swimming, camping, hiking, and group activities. State Parks is an advisor and partner in this project and they have advocated that the Boy Scout Property be enhanced to compliment improvements within Big Bend. Specifically, State Parks had advocated for the Boy Scout Property to include a small car/bus parking lot, trash receptacle, information kiosk, and day-hiking trails with connections to the regional and future Big Bend trail systems. Through State Parks' Nevada Recreational Trails Grant program, funding may be available for all of these facilities.

Besides reviewing and commenting on this SIP, the primary responsibility for State Parks may ultimately be to serve as an on-the-ground presence at the Boy Scout Property. If provided the adequate funding, State Parks is likely able to hire a Park Ranger, who could perform visitor services, participate in operations and maintenance, and protect property resources and visitors, specifically for the Boy Scout Property (A. Conklin, pers. comm.). Until funding is specifically made available to State Parks for a Park Ranger, State Parks has indicated that they could immediately offer some ranger-like responsibilities to the Boy Scout Property when time and resources permit (A. Conklin, pers. comm.).

Nevada Department of Wildlife
NDOW has the primary responsibility of managing the state's fish and wildlife resources and promoting safety on Nevada's waters. On Nevada's portion of the Colorado River, NDOW uses their boating safety office to ensure that boaters are safe and educated and that boating laws are enforced. NDOW will serve as an advisor and partner in the development of this SIP and specifically they will work closely with Reclamation to prohibit boater traffic in the backwater area.

Southern Nevada Water Authority
SNWA has the lead role and responsibility of coordinating with stakeholders and preparing and implementing the SIP. SNWA purchased the Boy Scout Property to ensure that the adjacent backwater habitat was conserved. With upland site protections and prohibitions on boater traffic in the backwater area, conservation goals can be achieved. Like Reclamation, SNWA has advocated for improvements on the Boy Scout Property to "demonstrate" habitat restoration and exhibit LCR MSCP partnerships. SNWA will provide in-kind assistance and some funding for the implementation of the SIP. External funding, however, will be needed to accomplish all components of the SIP. Therefore, SNWA will provide in-kind services to pursue and obtain grant funding.

1.2 Project Goals
The goals of the SIP are to 1) protect the adjacent backwater habitat, 2) conduct habitat enhancements so that the LCR MSCP and other stakeholders can showcase these areas to interested parties, 3) exhibit multi-stakeholder conservation and enhancement projects along the Lower Colorado River, and 4) provide low-impact pedestrian recreational use of the property. Furthermore, the goal of this plan is to conceptualize and design site improvements that are

reasonably expected to occur in the near future (e.g., vegetation enhancements) but not to fully design all components of the plan to construction-ready status.

2.0 PROJECT SETTING

2.1 Site Location

The Boy Scout Property is located in Section 5 of Township 33 South and Range 66 East. The site is located at 9999 Needles Highway, Laughlin, Nevada 89029, towards the southern tip of Clark County and south of the town of Laughlin. The site is approximately 15 acres (Figure 1) and it is bounded to the north and south by lands owned by the state of Nevada, to the west by Needles Highway and to the east by the Colorado River. The Clark County Assessor's Parcel number is 26500001004 and the zoning is Rural Open Land (R-U). The assessor's Geographic Information System (GIS) polygon, which displays the extents of the property, shows the boundaries of the property to be somewhat different than the field surveyed boundary (S. Shanahan, pers. obs.). Therefore, for planning and implementation purposes, the field surveyed boundary is used minus the backwater portions of the site (Figure 1).

2.2 Site Condition

2.2.1 Vegetation, Soils, and Wildlife

The majority of the site is considered by the Southwest Regional Gap Analysis Program (SWReGAP) to be part of the Invasive Southwest Riparian Woodland and Shrubland (Lowry et al. 2005; Figure 2). This ecological community represents less than 0.1% of the total land cover in Nevada and it is dominated by introduced riparian woody species such as salt cedar (*Tamarix ramosissima*). To the west of the site lies the Sonora-Mojave Creosotebush-White Bursage Desert Scrub and to the east of the site lies Open Water. Field evidence confirms that the site is mostly within the mapped boundary of the Invasive Southwest Riparian Woodland and Shrubland community. Field surveys conducted in 2006 by SNWA showed that the property is covered with more than 50% vegetation (Figure 2). The majority of this cover was by salt cedar, however, screwbean mesquite (*Prosopis pubescens*) and honey mesquite (*Prosopis glandulosa* var. *torreyana*) were important cover components contributing 10 to 20% cover in some areas. Recent vegetation surveys of the property show that mesquites are an important co-dominant (S. Shanahan, pers. obs.). Other species that are found on the site include mistletoe (*Phoradendron californicum*), arrowweed (*Pluchea sericea*), cheesebush (*Ambrosia salsola*), desert saltbush (*Atriplex polycarpa*), brittlebush (*Encelia farinosa*), and Palo verde (*Parkinsonia* sp.). Scientific names follow the Flora of North America (Flora of North America Editorial Committee 1993+) or PLANTS database (USDA, NRCS 2009).

Soil survey data from the Natural Resources Conservation Service (Soil Survey Staff 2009) show that soils on the site consist mostly of the Ripley-Holtville complex with lesser amounts of soils of the Carrwash association and Nonamewash-Rositas association (Figure 2). The Ripley-Holtville complex is characterized as well drained, mixed or stratified alluvium with 0 to 2% slopes. Soil salinity is expected to be non-saline to moderately saline (from 2,000 to 16,000 microsiemens per centimeter) while depth to water is more than 6.5 feet. Considering that available water capacity (i.e., the difference in water content between field capacity and the

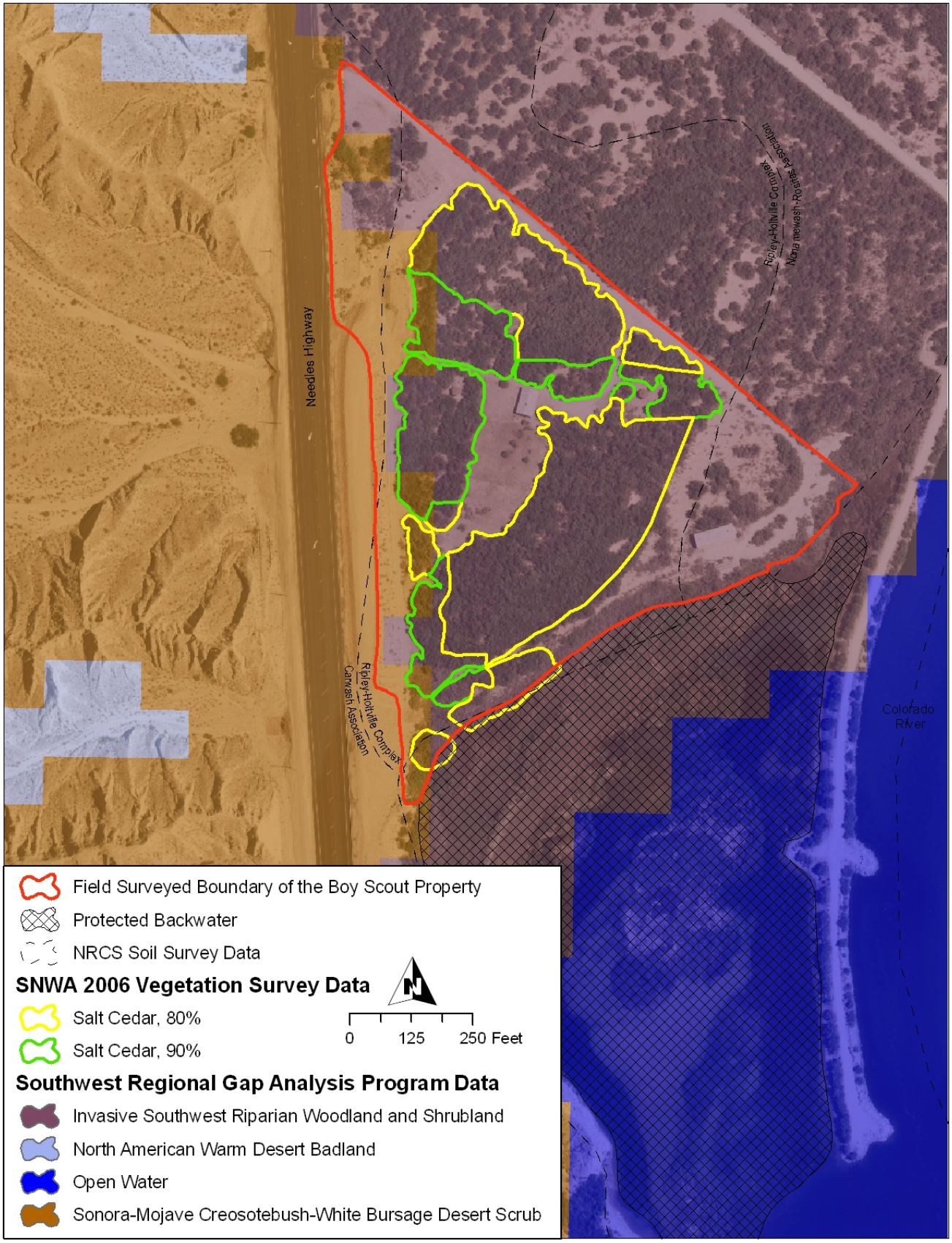

Figure 2: Environmental conditions on the Boy Scout Property.

permanent wilting point) in the upper 5 feet of the soil profile is between 5 and 8 inches, plant available water will be between 2.5 and 4 inches.

Soil investigations were conducted in January 2009 to validate soil survey data and to develop salinity and depth to water contours for the site. Twenty-eight soil samples were collected at approximately 1.5 feet below ground surface to characterize the typical planting depth for a containerized plant used in revegetation projects (Appendix A). Soil texture was determined by feel and soils were analyzed for electrical conductivity using the saturated paste and soil:water ratio methods (Gavlak et al. 2003). Depth to water was measured with a water level indicator at several 2 inch wide boreholes drilled on the site and at existing groundwater wells. Conductivity contour maps confirm that the Boy Scout Property is non-saline to moderately saline. Furthermore, depth to water exceeds 6.5 feet (Appendix B). These data were confirmed by two wells that were measured on the site by Reclamation in July 2008 that showed that depth to water was between 13 and 23 feet deep and specific conductance was 4,200 microsiemens per centimeter (Appendix C). Soil textures on the site were mostly sandy loam to loamy sand, indicating that the site is well drained.

SWReGAP lists 4 amphibians, 45 birds, 24 mammals, and 3 reptiles that are commonly found in the Invasive Southwest Riparian Woodland and Shrubland ecological community. A site visit conducted in January 2009 confirmed the presence of two birds, the phainopepla (*Phainopepla nitens*) and Gambel's quail (*Callipepla gambelii*). Phainopepla's were observed foraging berries from mistletoe's that have parasitized most, if not all, mesquites on the site. NDOW has conducted bird surveys near Big Bend and they show that more than 60 birds likely occur near the Boy Scout Property (C. Tomlinson, pers. comm.). Although seasonally dependent, some of the more common species include red-tailed hawk (*Buteo jamaicensis*), morning dove (*Passer domesticus*), greater roadrunner (*Geococcyx californianus*), common nighthawk (*Chordeiles minor*), northern flicker (*Colaptes auratus*), Say's phoebe (*Sayornis saya*), loggerhead shrike (*Lanius ludovicianus*), verdin (*Auriparus flaviceps*), black-tailed gnatcatcher (*Polioptila melanura*), northern mockingbird (*Mimus polyglottos*), yellow-breasted chat (*Icteria virens*), Abert's towhee (*Pipilo aberti*), white-crowned sparrow (*Zonotrichia leucophrys*), blue grosbeak (*Passerina caerulea*), brown-headed cowbird (*Molothrus ater*), house finch (*Carpodacus mexicanus*), and house sparrow (*Passer domesticus*) (C. Tomlinson, pers. comm.).

2.2.2 Facilities and Miscellaneous

The Boy Scout Property was used for many years by the Boy Scouts of America as a place of recreation and education for local youth. There are several remnant facilities (Figure 3) on the site that were used during this earlier period of activity. For example, there are four bench structures, a bathroom/commissary house, a boat house, a dock, an underground PVC irrigation pipe network, a shallow PVC well, two deep steel wells, a well house, power lines and poles, downed timber, a fence, miscellaneous stone features, and a soil stockpile. Other features may be present on the site, particularly underground features, however, they were not observed on site visits conducted in January 2009. Several of the facilities are in fair condition including the boat house, bench structures, and well house.

Figure 3: Existing facilities on the Boy Scout Property.

3.0 IMPROVEMENT PLAN

The following section details improvements that may occur on the Boy Scout Property. An initial site visit was conducted with most of the stakeholders (i.e., Reclamation, State Parks, and SNWA) in January 2009 to discuss the desired improvements. Based on these and other discussions with the stakeholders, this SIP was prepared and then submitted to the stakeholders for review and comment. SNWA has the lead role of effectuating site improvements; however, SNWA is limited to a measured financial commitment for these improvements. Therefore, this SIP was developed using a step-wise approach (See Section 5.0). For example, a complete list of desired improvements are listed in this section, however, not all of the improvements can be funded by SNWA. Subsequently, some improvements will need to be implemented with funding obtained from other sources. Considering the collaborative nature of this project, the stakeholders will work diligently to pursue additional funding or provide in-kind services to see that improvements are completed (see Section 5.0).

3.1 Facilities

For the purposes of this SIP, a "facility" is defined as something that is built, installed, or established to serve a particular purpose. All improvements on the site except vegetation improvements are considered facility improvements. Site improvements include building new facilities and remodeling old facilities and they are discussed below.

3.1.1 Trailhead

Marked turn lanes from northbound and southbound Needles Highway direct motorists to a driveway that leads to the Boy Scout Property. Although the site is currently surrounded by a chain-link fence on the west and northeast sides, access is available through a gate. Since there is a well marked driveway that already leads to the northwest corner of the property, a trailhead will be focused there (see "Parking" facility on Figure 3). Parking for both cars and buses is desirable, however, existing site conditions would need to be improved considerably for buses to regularly park on the site. For example, bus parking stalls should be approximately 18 feet wide by 74 feet long and the ground should be of sufficient hardness to withstand their payload. Moreover, merge lanes must be long enough on Needles Highway so that buses can enter moving traffic safely. Buses may be able to safely enter and exit the site considering the current low speed limit and low traffic volume on Needles Highway. Expected increases in the Needles Highway speed limit (A. Conklin, pers. comm.), however, may compromise future bus safety. Alternatively, with minor improvements, cars will easily be able to access and park on the site safely.

During the first phase of the SIP, an existing dirt area will be converted to a trailhead to accommodate car parking (Figure 4). Bus parking improvements may be conducted in subsequent plan phases. Because car stalls only need to be 10 feet wide by 18 feet long, 10 parking spaces will be available on the site. Heavy equipment will be used to move dirt from a stockpile on the site to the parking lot for capping, compaction, and beautification. Portions of the existing chain-link fence will be removed around the parking lot so that a new post and cable fence can be constructed. Downed telephone poles on the site will be recycled and used as curbing and as posts for the new fencing. Poles will be cut into 6 foot long sections then vertically buried 3 feet into the ground and spaced 20 feet apart (306 feet of material is required).

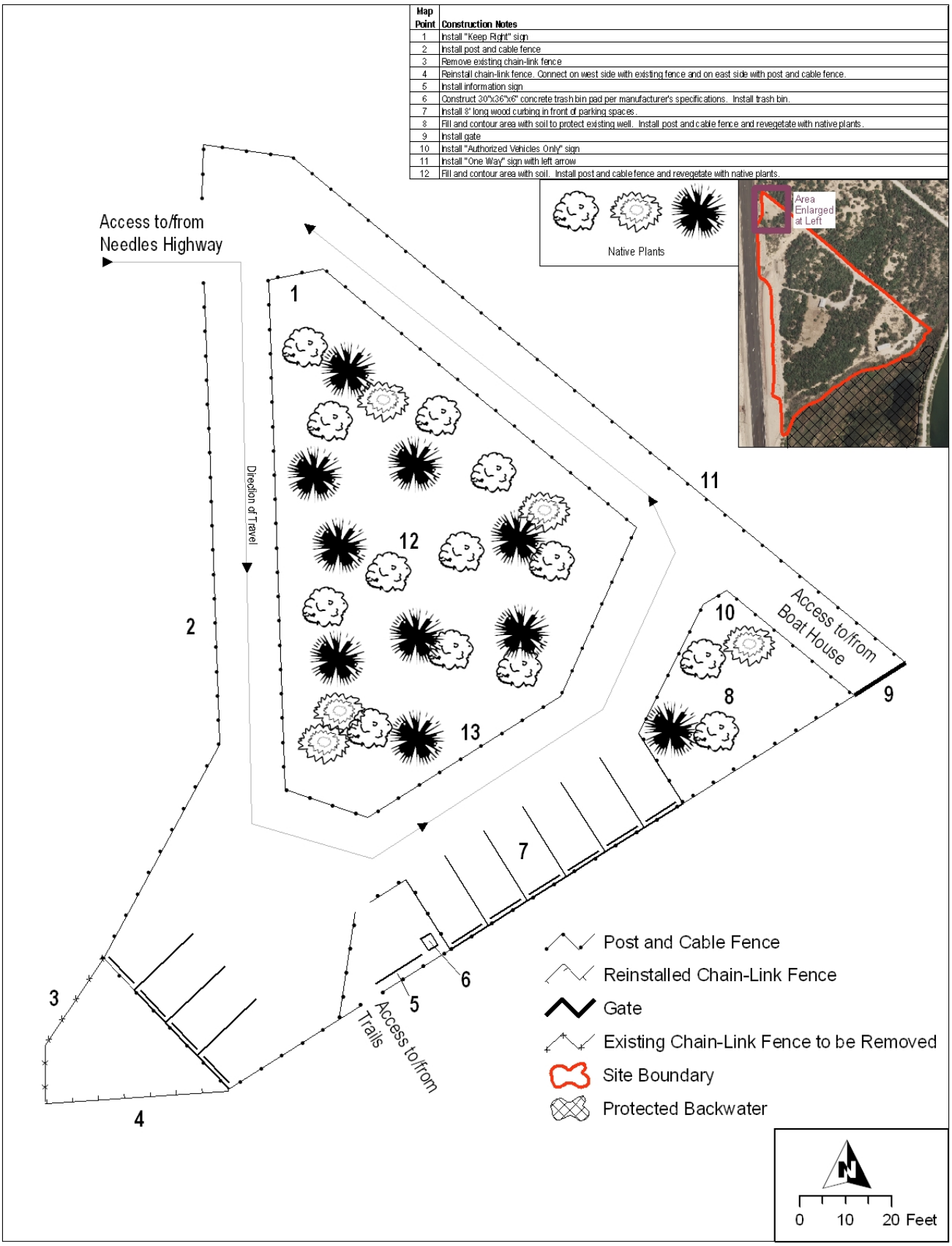

Figure 4: Conceptual trailhead design.

Then, they will be connected with steel cabling. Poles will also be cut into 8 foot sections and laid on the ground horizontally as a type of curbing in front of each stall to mark designated parking (80 feet of material is required). A new chain-link gate will be constructed at the east corner of the parking lot to continue allowing authorized traffic on the site.

Besides the parking lot improvements, two other improvements are desired. First, there is an approximately 100 foot deep, steel encased groundwater well on the east side of the parking lot that should be plugged and abandoned. During the first phase of the SIP, however, the well will at least be protected by filling and contouring soil around the site (Figure 4). The well is no longer needed because irrigation used for site improvements will come from another well on the property (see Section 3.2.2) and the 10 AFY of groundwater rights will not be permanently used on the site (H. Cheong, per. comm.). If the well were to be needed, the well would require repairs to make it useable (Appendix C). Furthermore, plugging and abandoning the well is the best option because it eliminates a groundwater contaminant exposure pathway. Because the well is outside the boundaries of the Las Vegas Valley Groundwater Management Program, a rebate to refund plugging and abandoning costs is not available. If the approximately $10,000 to plug and abandon the well is obtained, SNWA may be able to use existing contractors to conduct this work (E. Dano, pers. comm.).

The stakeholders discussed permanently placing a 3 yard capacity dumpster on the site which would be serviced by Republic Services and where visitors could dispose of their trash. State Parks has observed that Big Bend stays cleaner by using central dumpsters instead of smaller, more scattered trash bins (A Conklin, pers. comm.). If a 3 yard dumpster were to be used on the property, a trash enclosure would need to be built around it for aesthetic and logistical reasons. Republic Services has trash enclosure guidelines that would need to be met (Appendix D). Considering the anticipated cost of constructing a trash enclosure on the site and subsequently a reoccurring Republic Services pick up fee (~$150 per month), an alternative trash collection strategy is recommended. A single trash bin (Figure 5) should be centrally located on the parking lot (Figure 4) because it will be cheaper than using a 3 yard dumpster, albeit maintenance costs would be increased. Furthermore, the anticipated low site traffic likely does not justify dumpster related expenditures.

Figure 5: HB1-P trash bin from BearSaver.

3.1.2 Trails

Several informal trails linking the shaded benches/tables already exist on the Boy Scout Property. Furthermore, there is an east-west road on the north boundary of the site that is informally used as a trail and will continue to be needed by Reclamation to access the boat house. The road and trails will be restored/improved if needed and additional trails will be constructed to provide a 0.64 mile loop around the site (Figure 6). Vegetation that has overgrown into the existing trails will be trimmed back to provide a 4 to 6 foot wide corridor. In general, no surface material (e.g., decomposed granite, asphalt, concrete, etc.) will be used above the native soil for the trails. Trails made from native soil have some advantages over other trail

Figure 6: Trails design.

types including the ease and low cost of construction and maintenance. The only exception is that mulch generated from salt cedar clearing activities will be used to surface some trails. Although using the mulch on site will keep disposal costs down, mulch will also reinforce native soil trails to minimize dust, rutting, and uneven or bumpy surfaces. Mulch usage will be determined during construction. Salt cedar mulch may contain viable seed (therefore some plants may germinate along the trail system and will require maintenance), however, research in New Mexico has shown that a ground layer of mulch prohibits salt cedar germination more than uncovered ground (K. Lair, pers. comm.). Major access to the trail system will be by way of the trailhead on the northwest corner of the site. A sign donated to SNWA from State Parks (Figure 7) will be refurbished and then posted at the trailhead where it will depict the trail system (see Section 3.1.3). Only pedestrian, low impact, daytime use only (sunrise to sunset) traffic will be allowed on the trails. State Parks will be informally responsible for opening/closing the trailhead gate each day as a stop gap measure until a formal agreement can be developed among the stakeholders that will direct resources to State Parks to perform these duties on a permanent basis.

Figure 7: Metal sign donated to SNWA from State Parks.

3.1.3 Benches and Viewing/Interpretive Areas

There are four covered bench facilities located on the property that will be used for picnicking and other uses along the trail system (Figure 6). Volunteer labor from a Boy Scout pursuing his Eagle Scout award will be used to refurbishment them because they are in moderately poor condition currently. Detailing bench improvement activities is not a goal of this SIP. Besides rehabbing the benches, two viewing/interpretive area improvements are proposed herein. For example, a metal sign donated to SNWA by State Parks (A. Conklin, pers. comm.) will be installed at the trailhead (Figures 4 and 7). The sign will be refurbished and anchored into the ground with a concrete footing per local codes. Panels representing three concepts will be affixed to the sign to interpret the site for visitors (see Figure 8 for an example). The first concept will be to describe the rules and regulations on the site. The second concept will be to describe the project, which will include information on the site's history, the importance of partnerships, and the on-site improvements. The third concept will be to display the site's characteristics, which will include a map of the trails, benches, parking lot, and other facilities. SNWA will use internal graphic design staff for panel creation.

The trail system that will be established will include a segment paralleling the southeastern boundary of the site. This portion of the trail will allow visitors to view the protected backwater. A bird blind/viewing tower will be constructed along the trail so that visitors can view the area

Figure 8: Information panels that were constructed at a kiosk along the Las Vegas Wash, Nevada are used extensively for outreach events.

Figure 9: Examples of bird blinds/viewing towers.

and its wildlife (Figure 6). Many different types of bird blinds/viewing towers can be built, ranging from simple to complex structures (Figure 9). Volunteer labor is expected to be used to construct the bird blind/viewing tower.

3.2 Vegetation

Typical native plants found along the lower Colorado River include Fremont cottonwood (*Populus fremontii*), willows (*Salix* spp.), mesquites (*Prosopis* spp.), arrowweed, wolfberry (*Lycium* spp.), seepwillow (*Baccharis salicifolia*), saltbush (*Atriplex* spp.), cattails (*Typa* spp.), and bulrush (*Schoenoplectus* spp.). These plants are found in areas where hydrologic and edaphic conditions permit. Since the Boy Scout Property is a mesic site that already contains a mixture of native and non-native plants, vegetation improvements should include removing non-native plants and replacing them with mesic native plants.

Salt cedar is the most dominant species found on the Boy Scout Property and although it provides important functions, which include wildlife habitat, shade, and erosion control, it usually out-competes native species and creates low-functioning monocultures. Reduced ecological function typically propagates as biodiversity loss (Engel-Wilson and Ohmart 1978; Hunter et al. 1988; Ohmart et al. 1988; Zavaleta 2000). The invasion of salt cedar has presented many challenges for ecologists who want to preserve and restore riparian habitats that support high biodiversity.

3.2.1 Clearing

Mesquites provide the most important native cover component on the site. Other native species, such as arrowweed, provide cover on the site but not as extensively. Mesquites are a desirable cover component because they are a legacy of historical conditions on the upper terraced slopes of the Lower Colorado River. Because most of the mesquites on the site are intermingled with salt cedar, indiscriminate vegetation clearing is not an option. For example, careless clearing could result in undesirable harm or removal of the mesquites. Clearing activities, therefore, should be targeted at selectively removing salt cedar and not other vegetation. Besides salt cedar, there are other items on the site, including the bathroom/commissary house and boat dock, that need to be cleared. These facilities are to be cleared prior to SIP implementation (H. Cheong, pers. comm.) therefore these activities are only conceptually described in this SIP (see Section 3.1). Prior to beginning any clearing activities which may affect the existing ground elevation, a phone call to 811, the "Call Before You Dig" free underground utility locating service, would be placed.

Both manual and mechanical options were considered for clearing salt cedar on the site, however, a manual removal option was chosen because of the relatively high cost of mechanical removal (Appendix E; R. Sweat, pers. comm.). Manual removal has some advantages over mechanical removal including, among other advantages, an easier ability to distinguish salt cedar from mesquites thereby reducing the chance of inadvertent mortality, requiring less permits/authorizations, minimizing ground disturbance, and schedule flexibility. Twelve-person conservation camp crews from the Nevada Division of Forestry (NDF) have been successfully used in Southern Nevada to clear approximately 1.5 acres of salt cedar per day and NDF will be used to clear salt cedar from the property. NDF will use the "cut stump" method of removal. First, they will use hand held equipment (i.e., handsaws, loppers, chainsaws, etc.) to cut down the salt cedar and then they will spray the cut stumps with an herbicide (i.e., Garlon® 4; triclopyr, Dow AgroSciences, Indianapolis, IN). Cleared material will be chipped on site with a grinder and used as mulch and/or surfacing for the trail system (see Section 3.1.2). Although the "cut stump" method is an effective technique for salt cedar removal, future maintenance will likely be needed.

3.2.2 Irrigation

Supplemental irrigation is important for plant establishment since precipitation near the site is generally less than 5 inches a year and groundwater is greater than 6 feet deep. Although riparian plants quickly develop extensive root systems that exploit groundwater sources, which allow them to depend less on supplemental irrigation, upland plants often require extensive irrigation to become successful. Screwbean and honey mesquites are facultative to obligate

riparian plants; therefore, some initial irrigation will need to be provided to them to ensure their success. However, since this project will partially use a deep planting technique, not all plants will need to be irrigated.

Irrigation water will come from the Colorado River because along with SNWAs land purchase, SNWA purchased an annual right to 10 AFY of water withdrawn from an existing groundwater well on the site. Although the well has not been used for several years and it is currently in poor condition, pump tests indicate that the well can sustain 150 gallons per minute of flow (Appendix C). Reclamation has offered to rehabilitate the groundwater well on the site and install a pump and appurtenant components to serve an irrigation system on the site (J. Blake, pers. comm.).

Many different types of systems and strategies can be used to irrigate a site. Selecting an appropriate system depends on several factors including but not limited to water availability, infrastructure cost, planting design, plant water use, and groundwater depth. The irrigation system will be constructed and set in place prior to planting in order to minimize disturbance to the plants. Irrigation will continue throughout the year on a regular basis until roots reach the water table (1-3 years).

Inline drip irrigation will be used on the Boy Scout Property because of installation ease/cost, the low number of plants that are to be irrigated, the desire to use the least amount of water as possible, and the limitations on flow available to the system. This irrigation method is efficient because water is slowly applied to reduce infiltration loss and directly applied above the plant's roots whereby infiltrating water facilitates deep root growth. Water can also be applied between plants to facilitate lateral root water uptake and seed germination. The irrigation system will consist of main and lateral delivery lines connected to dripline tubing (Figure 10). Main and lateral lines will consist of Certa-Lok™ Yelomine™ piping between 2 and 4 inches in diameter and 30 to 40 feet in length. The advantage of Certa-Lok™ is that it is a restrained joint PVC pressure piping system that is non-corrosive, light weight, withstands high flow rates, and bends easily (Appendix G). Furthermore it "contains impact modifiers and UV (Ultraviolet) inhibitors [that] provide higher impact strength over an extended period of time [that]…..allow[s] [it] to be used in above-ground….applications" (CertainTeed Corporation 2008). Because of the unique joining system, Certa-Lok™ is easy and simple to transport and install. Certa-Lok™ systems have been successfully used on revegetation projects at the Las Vegas Wash and the entire pipe delivery system for the Boy Scout Property will be borrowed from unused SNWA surplus.

At most main and lateral line connection points, a Certa-Set™ sled coupling will be used whereby Rainbird® landscape dripline (or similar product) with pressure compensating inline emitters can be attached (Appendix H). At most locations, driplines will be connected to main or lateral lines on both ends to minimize system pressure loss. Approximately 0.5 inch inside diameter polyethylene dripline will be used with 0.9 gallon per hour emitters spaced at 24 inch intervals in the dripline. Dripline will be laid on the ground in 8 foot circumference coils (i.e., 2.5 foot diameter coils) around each plant so that there are four emitters per plant yielding a potential application rate of approximately 4 gallons per hour per plant. Considering the initial canopy diameter for the plants that are to be used, dripline coils will likely need to be widened to accommodate future growth. During watering days, water will be applied to each plant for a 2 hour period so that 8 gallons of water are applied. Revegetation projects near Yuma, Arizona

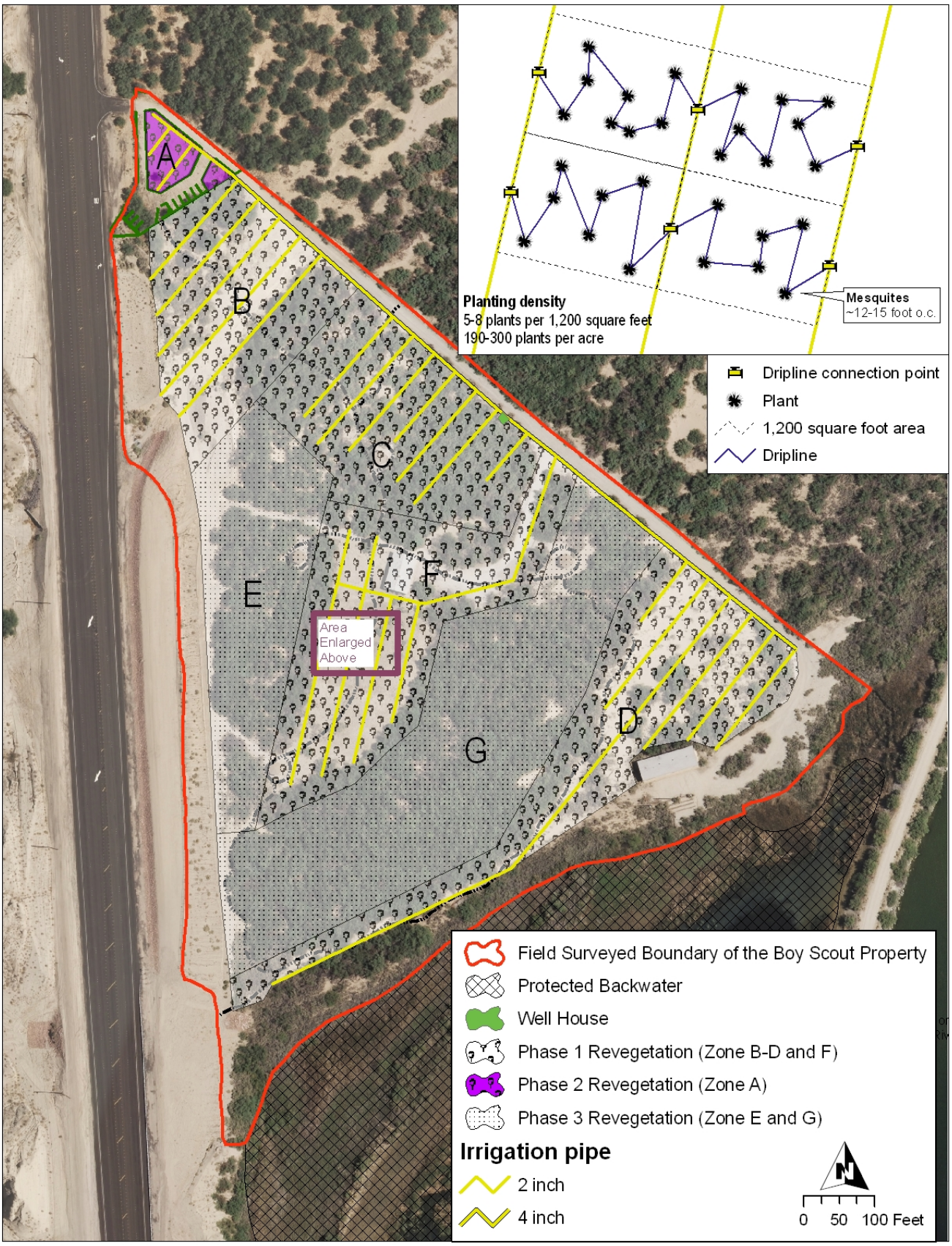

Figure 10: Planting layout and irrigation design.

have exhibited high success with this watering volume (F. Phillips, pers. comm.). Although irrigation water for the Boy Scout Property will not come from municipal sources (i.e., sources formally managed by the Big Bend Water District and now managed by the Las Vegas Valley Water District) that are subject to mandatory watering restrictions, watering restrictions on the site will be self-imposed to comply with SNWAs regional guidelines (see http://www.snwa.com/html/drought_watering.html).

Since this system will provide irrigation to individual plants, water loss due to evaporation and runoff is reduced. When compared to other systems, this system is relatively easy to install, easy to design, and is typically inexpensive. With the use of solar panels, electric pumps, and irrigation clocks, this system may be fully automated.

3.2.3 Planting

Screwbean and honey mesquites will be mostly used to revegetate the Boy Scout Property after salt cedar has been cleared. Mesquites will be used because they are native to the site and they represent a vegetation cover type that would be planted as part of the LCR MSCP. Furthermore, they are diagnostic to secondary and higher terraces of the historical Colorado River floodplain, of which the Boy Scout Property belongs. Other plant species, such as brittlebush, cheesebush, quailbush (*Atriplex lentiformis*), fourwing saltbush (*Atriplex canescens*), arrowweed, and iodine bush (*Suaeda moquinii*), were considered for planting on the site. These plants will not be used to revegetate most of the site because they will likely germinate on the site from adjacent locations without assistance. Some of these species, however, will be used at the trailhead.

Nursery-propagated containerized plants have been used extensively for revegetation projects in the Lower Colorado River Basin. Containerized plant material is often more successful than other plant material types because of the well established root systems within the containers. This method, however, can be expensive, labor intensive, and require costly transport. Tree species are often outplanted from one- to five-gallon containers while shrubs and other low vegetation are outplanted as one-gallon containers. Containerized plants are essentially a requirement for mesquite revegetation projects because mesquite seeds require scarification to germinate. Fourteen hundred five-gallon honey mesquites and 240 five-gallon screwbean mesquites are available from three nurseries including the NDF State Tree Nursery at Floyd Lamb State Park in Las Vegas, Nevada, the National Park Service nursery at Lake Mead National Recreation Area, and Mountain States Wholesale Nursery in Litchfield Park, Arizona. Mesquites from these nurseries were grown from seeds that were collected from native mesquite stands along the Las Vegas Wash (NAD 1983, UTM Zone 11N; 680504, 3995917) and at Sunset Park (NAD 1983, UTM Zone 11N; 670091, 3993149) in Las Vegas, Nevada. Importantly, these mesquite species are the same species that are found on the Boy Scout Property.

Five-gallon container mesquites will generally be planted between 12 and 15 feet apart (i.e., “on center” or simply “o.c.”) using traditional and novel planting techniques (Figure 11). The planting density equates to approximately 190 to 300 plants per acre. Particular care will be taken in the field to randomize the planting density and location so that the revegetated area closely resembles and compliments the native background conditions. Five-gallon plants were chosen because they are currently available from the nurseries and their height is required when

using the novel planting technique (see below). Revegetation will occur in three phases and across seven planting zones (Figure 10).

Phase 1 Revegetation

After the irrigation system has been installed (see Section 3.2.3), the first planting phase will be implemented on Zones B-D and F (7.87 acres). These zones were chosen first because they currently have or once salt cedar is removed will have low vegetation cover. Therefore, focusing efforts on these open areas will be the most cost efficient. Plantings on Zones B, C, and F (5.71 acres) will consist of 945 honey mesquites (88% of the zones) and 140 screwbean mesquites (12% of the zones). On Zone D (2.16 acres), 310 honey mesquites (76% of the zone) and 100 screwbean mesquites (24% of the zone) will be planted. The number of screwbeans to be planted on Zone D is proportionally double the other zones because novel planting techniques will be conducted on Zone D.

Phase 2 Revegetation

The second planting phase which will focus on Zone A will be conducted once the trailhead has been completed. Thirty-two honey mesquites will be planted on this zone along with 32 brittlebush and 32 cheesebush. The planting density for Zone A (i.e., 565 plants per acre) is much higher than the other zones because of the desire to make the trailhead aesthetically pleasing for visitors while also exhibiting the site's dominant vegetation type (i.e., honey mesquite). For example, both cheesebush and brittlebush have attractive yellow flowers.

Phase 3 Revegetation

If appropriate, the last phase of revegetation will be conducted on Zones E and G. Historical vegetation surveys on the site show that these zones are dominated by greater than 80% salt cedar, however, recent field observations indicate that mesquites may be more abundant than previously recorded. Aerial imagery taken of the site in the summer of 2008 validates the more recent observation because it appears that 50-75% of the plants in these zones are mesquite trees. When the site is cleared of salt cedar, an evaluation of the need to revegetate Zones E and G will be conducted. If ultimately conducted, honey and screwbean mesquites will be planted with the same 88% to 12% ratio planned for Zones B, C, and F.

Novel Planting Technique

Part of this project will be a demonstration of "deep" planting techniques on Zone D. This technique involves planting long-stemmed container plants deep underground so that the root ball is in contact with the

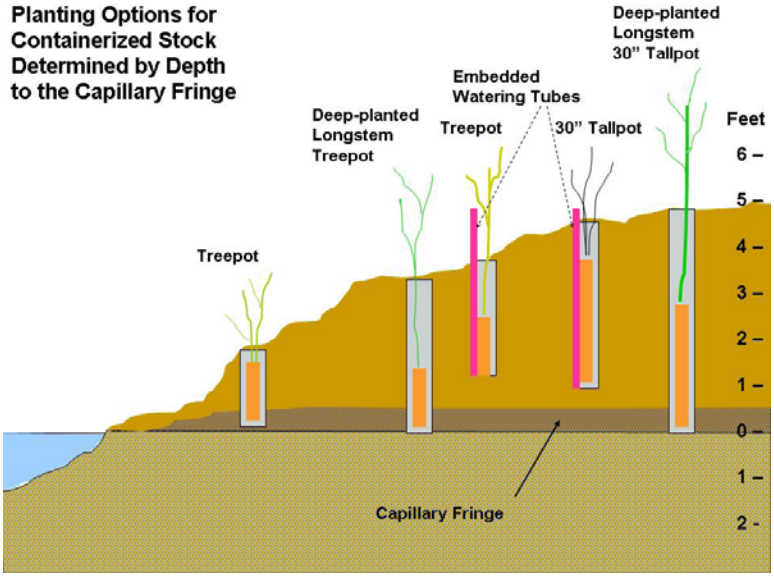

Figure 11: Illustration of the "deep" planting technique (see Appendix E).

capillary fringe (Figure 11 and Appendix F). Deep planting is a desirable technique because it requires little to no irrigation and for this demonstration, no irrigation will be applied. Irrigation piping, however, will be installed in the event that the technique fails. Because screwbean mesquites have already shown good success with deep planting techniques, they will be primarily used for this demonstration. Some honey mesquites will also be used but because they are a facultative riparian species that is relatively intolerant of flooding they may not be as successful as the screwbean mesquites.

3.3 Trash/Debris Removal

The Boy Scout Property is littered with trash and other debris that should be removed. Several pieces of downed timber, similar in shape and size to telephone poles, are scattered across the site. Other debris includes PVC irrigation piping, a boat dock, and stone features. During the clearing phase of the plan (see Section 3.2.1), unused trash/debris will be loaded into roll-off bins and taken to the local landfill.

3.4 Permits

To accomplish improvement activities on the Boy Scout Property, environmental compliance activities and interagency coordination is required. Local, regional, and federal permits and consultations are often required to initiate improvement activities. Since the permit application process can take several months, sufficient time should be allotted for this process prior to ground breaking activities. The proposed site improvements require that a few permits be obtained before work is conducted. Specifically, permits are needed for facility removal/installation. Other environmental compliance has already been completed (H. Cheong, pers. comm.) or is not necessary for the property including consultation under the National Historic Preservation Act, Endangered Species Act, and National Environmental Policy Act.

Facility Removal/Installation

Some permits may be required before facilities can be removed or installed; they include a dust permit from the Clark County Department of Air Quality and Environmental Management (DAQEM) and permits from Clark County Development Services. DAQEM is responsible for permitting surface grading and trenching activities in Clark County that may cause dust as part of their overall duty to administer air pollution control programs. Clark County air quality regulations require a dust permit to be issued for grading activities that are on greater than ¼ acre of land or trenching activities that are greater than 100 feet long. Dust permit fees are assessed at $138 per acre of disturbance. Clark County Development Services is responsible for issuing permits as part of their duties to administer the Building Administrative Code of Clark County (Administrative Code). Development Services' Laughlin office should be contacted to determine which permits may be required before facilities are constructed. Grading permits and sign construction permits may be required unless they are specifically exempt according to Section 22.02.207(A) and 22.02.210(J) of the Administrative Code, respectively. General building permits may also be required.

3.5 Public Involvement

Because improvement activities will encourage low-impact recreational use of the Boy Scout Property, public involvement in reviewing this SIP is essential. Public input on this SIP will be conducted as part of regularly scheduled meetings (i.e., second Tuesday of the month) of the

Laughlin Town Advisory Board (Laughlin TAB). The Laughlin TAB was formed per Nevada Revised Statute (NRS 269.576) and its specific duties are to: (a) assist the Board of County Commissioners (BCC) in governing the unincorporated town by acting as liaison between the residents of the town and the BCC; and (b) advise the BCC on matters of importance to the unincorporated town and its residents. Because of these duties and since the public is encouraged to attend these meetings as part of the Nevada Open Meeting Law process, the Laughlin TAB is an ideal forum where the SIP can be presented to and discussed with the public.

4.0 MAINTENANCE AND MONITORING

4.1 Maintenance

Maintenance should occur for at least two years after planting is completed to ensure success of the project. Weekly visits should be conducted at first but with time the frequency should decrease. Long-term maintenance should be conducted by State Parks personnel, if time and resources permit, as part of their routine duties at Big Bend.

4.1.1 Vegetation Improvements

Invasive plant re-colonization is likely to occur on the revegetation site before native plants can establish and create a mature canopy. Therefore, periodic weeding using hand pulling methods or small mechanical tools will be necessary until native plants are established. Also, there are other factors that may contribute to plant mortality, including root shock, herbivore activity, maintenance negligence, and competition, therefore replanting may be necessary to ensure successful native plant cover. Irrigation systems should be checked periodically to ensure that they are working properly and that planted vegetation is receiving sufficient water. A summary of weed maintenance techniques that should be used to ensure that revegetation activities on the Boy Scout Property are successful is as follows. Other activities such as irrigation and plant maintenance are self-evident and therefore not included herein.

Manual Removal

This method is most effective in areas where invasive species infestation is minimal or invasive species are re-sprouting in areas that were previously cleared by other methods. Hand tools (i.e., picks, pulaskis, and shovels) can be used to loosen the soil surrounding the plants and remove the entire root system or below the root crown. Also, simple hand-pulling, without the use of tools, can be used to remove re-sprouting plants.

Chemical Removal

Chemical application techniques have proven to be very effective in controlling many invasive species. Foliage application with herbicides such as: Rodeo® (glyphosate; Dow AgroSciences, Indianapolis, IN), Escort® (metsulfuron methyl; DuPont, Wilmington, DE), and Habitat® (imazapyr; BASF, Research Triangle Park, NC) is effective for controlling and reducing infestations of invasive herbs. For this control method, the herbicide should be applied as needed to continually reduce the infestation. In order to control invasive trees, such as salt cedar, Garlon® 4 (triclopyr; Dow AgroSciences, Indianapolis, IN) herbicide is most affective when applied basally to the cut stumps (see Section 3.2.1).

4.1.2 Trash, Trails, and Other Facilities

The trash bin located at the parking lot will require periodic cleaning and the entire site should be cleaned of trash periodically as well. During the active maintenance period (i.e., the first two years after planting), SNWA and other visiting stakeholders will be able to clean out the trash bin in coordination with normal site visits. After this period and if funding is available, it is expected that State Parks will assume trash collection duties.

Periodic rain events may cause the trail system to become degraded by erosion. During routine site visits, trails may need to be reshaped or otherwise reinforced. Trails maintenance will be conducted on an as needed basis. Other facilities should be maintained on an as needed basis too. For example, vandalism and theft may require that facilities are periodically cleaned and/or replaced.

4.2 Monitoring

4.2.1 Vegetation

In order to determine if revegetation activities are successful, a variety of general vegetation parameters should be monitored. Monitoring data should be collected for native and non-native cover, plant condition, and survivorship. Revegetation activities will be considered a success if over the monitoring period non-native cover remains ≤ 15%, native cover increases, and survivorship ≥ 80% the first year and increases thereafter. Monitoring should occur at a minimum during the first two growing seasons (September-October) after planting is complete. Long-term monitoring of the site should be conducted once plants have established (> 2 years) at an interval of every 5 years to ensure long-term revegetation success.

There are multiple sampling regimes that can be applied to measure the vegetation parameters discussed above, however establishing randomly selected transects is the most common technique for monitoring revegetation projects in the first two years. Transects should be randomly selected and replicated to cover all of the vegetation species planted and environmental conditions (salinity and depth to water) present. The number of transects and transect length will be determined on a case by case basis depending on several factors, including patch size, restoration technique, species, and environmental variation within each stand. Within each sample transect, each tree and shrub species will be measured and recorded. Some measurements that will be recorded and the specific techniques used to obtain these data are provided below.

4.2.1.1 Plant Survivorship and Condition

Revegetation sites are often deemed a success by the number of plants that survive after planting is complete and a period of time has passed since intensive management. This is a general indicator that plants will continue to survive in the environment after revegetation activities have been completed. In order to calculate percent survivability in the subset of the population sampled, the total number of viable plants in a transect is divided by the total number of plants surveyed and then multiplied by 100. Survivability should be calculated for each different plant species because different factors affect different species. This survivability measure can be compared from growing season to growing season and ultimately expressed as a rate of survival. Along with identifying survivorship in plants, it is also important to evaluate the condition of the

surviving plants. In order to accomplish this, the condition of the plants in the designated transects are ranked and recorded based on a condition category.

4.2.1.2 Cover

Percent cover is an important characteristic to monitor in a stand of vegetation because it can serve as a criterion for relative dominance within the community. Cover is expressed as a percentage value and in a multi-layered community it can often exceed 100%. In a multi-layered community, it may be important to separate cover estimates into different stratums. Cover estimates can also estimate non-native species encroachment. Depending on the site conditions, planting regime, and density, two methods could be used to determine percent cover for revegetation sites, including line-intercept and ocular estimation.

Line-intercept

This method comprises of stretching a tape between two stakes, and the canopy of each species that vertically projects over the tape is measured along its length. The percent cover is calculated by the total length of tape that is intercepted by the vertical projections of a species by the total length of tape. Line-intercepts should be of sufficient length to reflect the vegetation community and allow for an accurate estimate of percent cover by species. This technique is most effective for vegetation with dense canopies, such as shrubs or matted vegetation. It is not ideal for measuring cover of grasses or some herbs.

Ocular estimation

This method visually estimates cover in a selected area by using previously defined cover classes. One large plot (15 feet by 15 feet) could be located along a transect or several 10 square feet plots can be systematically placed every 5-15 feet along a transect for visual cover estimates. The Daubenmire (1959) or Braun-Blanquet (1965) cover class systems are the most commonly used to estimate cover. Cover data using this method is obtained relatively fast and easy. The largest concern with this method of estimating cover is with observer bias, however this may be resolved by having multiple observers estimating cover and averaging values.

4.2.1.3 Repeat Photography

Repeat photography reveals the growth success of grasses and herbs as well as the growth of the entire site over time. Permanent photo points should be established on the site to document growth over time. Photo points should be marked with a permanent re-locatable object, such as an iron rod painted with fluorescent paint. This object should be labeled with an identification number and site description, and GPS coordinates taken of the location. In order to relocate the photo point, a photograph of the photo point should also be taken. Repetitive site photos should be taken at the same orientation, therefore it is important to capture a distinguishing background feature that can be used to orientate every photo.

5.0 BUDGET, SCHEDULE, AND ADDITIONAL NEEDS

Site improvements on the Boy Scout Property will be conducted over a multiple year period if funding is obtained. Most of the facility improvement activities will occur in 2009 while monitoring and maintenance activities will be conducted in 2009 and in subsequent years (Figure 12). The budget for Phase I of the SIP is $65,500 (Figure 12) with the majority of these costs

incurred by SNWA through the use of external contractors. Phase II of the SIP will only be implemented if funding becomes available and is budgeted at $30,000. Substantial cost savings have been achieved by maximizing in-kind services provided by Reclamation, SNWA, and State Parks. For example, Reclamation has agreed to purchase, install, and make operational the groundwater well pump and associated appurtenances that will be used to deliver water to the irrigation system and to pay for the plants used on the site at one-gallon pricing (J. Blake, pers. comm.). Other cost savings include the use of volunteer labor from the Boy Scouts of America for planting plants and constructing a bird blind/viewing tower (G. Lewis, pers. comm.). Moreover, a private contractor, Native Resources of Nevada, has volunteered foreman services ($55 per hour) for the project (G. Anthony, pers. comm.). Actual in-kind costs to the stakeholders and other volunteering organizations are not detailed in the budget, however, their value is certainly greater than $75,000.

Additional Needs

Phase II – Phase II of the SIP will be implemented if needed and if funding becomes available. Obtaining grant funding would be the best mechanism whereby these activities could be completed. For example, State Parks allocates grants through the Nevada Recreational Trails Program that may be used for bus parking amenities or for expanding trails on the site. Grant applications are typically submitted in December of each year and are awarded competitively (R. Moore, pers. comm.). In order for this SIP to be fully effectuated, SNWA will actively search for grant funding. One task is listed in Phase II of the SIP schedule/budget (Figure 12), therefore, this task will be targeted to receive grant funding.

Long-Term Maintenance – Long-term maintenance of facility improvements will be an on-going challenge for the success of the SIP. For example, seemingly minor acts of vandalism or theft could prevent revegetated areas from meeting performance criteria or degrade site aesthetics. To meet these and other long-term maintenance needs, State Parks has agreed in principle to maintain the Boy Scout Property in accordance with Big Bend's maintenance policies if funding is provided to them for an additional Park Ranger (A. Conklin, pers. comm.). The stakeholders will need to find a funding mechanism whereby State Parks can maintain the site in the long-term.

Long-Term Management – This SIP is intended to outline a short-term (1-2 year) workplan for improvement activities on the Boy Scout Property. Although this plan focuses on short-term improvements, the site is expected to be managed by the stakeholders as described in this plan in perpetuity as resources permit. For example, Reclamation will be administering the LCR MSCP for 50 years. Therefore, the Boy Scout Property must serve the intended purpose of protecting the backwater for this period of time. The stakeholders will periodically gather to review the performance of management actions and adaptive management principles will be used to guide future management decisions.

ID	% Complete	Task Name	Duration	Start	Finish	Predecessors	Budgeted Cost	Work Performed By
1	**100%**	**SIP Development**	**153 days**	**Fri 1/9/09**	**Tue 8/11/09**		**$0.00**	**Multiple**
2	100%	Prepare SIP	36 days	Fri 1/9/09	Fri 2/27/09		$0.00	SNWA (ER)
3	100%	Submit SIP to stakeholders for review	1 day	Mon 3/2/09	Mon 3/2/09	2	$0.00	SNWA (ER and SWR)
4	100%	Stakeholder review	63 days	Thu 3/5/09	Mon 6/1/09	3	$0.00	Reclamation, State Parks, and NDOW
5	100%	Update SIP	51 days	Tue 6/2/09	Tue 8/11/09	4	$0.00	SNWA (ER and SWR)
6	**29%**	**Implement Phase I of the SIP**	**678 days?**	**Wed 2/11/09**	**Fri 9/16/11**		**$107,732.00**	**Multiple**
7	**52%**	**3.0 Improvement Plan**	**191 days?**	**Wed 2/11/09**	**Wed 11/4/09**		**$92,732.00**	**Multiple**
8	**53%**	**3.1 Facilities**	**177 days?**	**Tue 3/3/09**	**Wed 11/4/09**		**$22,300.00**	**Multiple**
9	**1%**	**3.1.1 Trailhead**	**68 days**	**Wed 7/1/09**	**Fri 10/2/09**		**$14,500.00**	**Multiple**
10	**0%**	**Improve existing parking lot for car parking**	**39 days**	**Wed 7/1/09**	**Mon 8/24/09**		**$13,500.00**	**Multiple**
11	0%	Cut poles for post and cable fence	12 days	Wed 7/1/09	Thu 7/16/09		$500.00	NDF
12	0%	Contour, grade, and fill lot	15 days	Fri 7/17/09	Thu 8/6/09	11,63	$10,000.00	SNWA (SS) and Native Resources
13	0%	Install post and cable fence	3 days	Fri 8/7/09	Tue 8/11/09	12,11	$1,000.00	NDF and Native Resources
14	0%	Install wood curbing	1 day	Fri 8/7/09	Fri 8/7/09	11,12	$500.00	NDF and Native Resources
15	0%	Remove portion of old chain-link fence with gate	1 day	Wed 8/12/09	Wed 8/12/09	13	$750.00	NDF and Native Resources
16	0%	Install new chain-link fence	1 day	Thu 8/13/09	Thu 8/13/09	15	$750.00	NDF and Native Resources
17	0%	Design and install fence fabric	7 days	Fri 8/14/09	Mon 8/24/09	16	$0.00	SNWA (ER)
18	0%	Plug and abandon well or seal well casing	2 days	Thu 10/1/09	Fri 10/2/09		$0.00	SNWA Contractor TBD
19	50%	Install trash bin	1 day	Tue 8/25/09	Tue 8/25/09	10	$1,000.00	SNWA (ER and SS)
20	**70%**	**3.1.2 Trails**	**141 days**	**Tue 3/3/09**	**Tue 9/15/09**		**$2,000.00**	**NDF**
21	100%	Trim vegetation back from existing trails	141 days	Tue 3/3/09	Tue 9/15/09		$500.00	NDF
22	75%	Construct new trails	141 days	Tue 3/3/09	Tue 9/15/09		$1,000.00	NDF
23	35%	Spread mulch on trails	141 days	Tue 3/3/09	Tue 9/15/09		$500.00	NDF
24	**30%**	**3.1.3 Benches and Viewing/Interpretive Areas**	**165 days?**	**Thu 3/19/09**	**Wed 11/4/09**		**$5,800.00**	**Multiple**
25	100%	Refurbish existing benches	16 days	Mon 5/25/09	Mon 6/15/09		$1,500.00	Boy Scouts of America
26	0%	Refurbish sign donated by State Parks	109 days	Thu 3/26/09	Tue 8/25/09		$0.00	Bullhead City Signworks
27	0%	Install refurbished sign	2 days	Wed 8/26/09	Thu 8/27/09	10,26	$3,000.00	Bullhead City Signworks
28	**100%**	**Develop interpretive panels for sign**	**65 days?**	**Thu 3/19/09**	**Wed 6/17/09**		**$0.00**	**SNWA (ER and PI)**
29	100%	Develop text	20 days?	Thu 3/19/09	Wed 4/15/09		$0.00	SNWA (PI)
30	100%	Text submitted to ER/SWR	0 days	Wed 4/15/09	Wed 4/15/09	29	$0.00	SNWA (PI)
31	100%	Text comments to PI	6 days?	Thu 4/16/09	Thu 4/23/09	30	$0.00	SNWA (ER and SWR)
32	100%	Text to design	0 days	Mon 4/27/09	Mon 4/27/09	31	$0.00	SNWA (PI)
33	100%	Design draft to ER/SWR	0 days	Wed 5/13/09	Wed 5/13/09	32	$0.00	SNWA (PI)
34	100%	Design draft comments to PI	6 days	Wed 5/13/09	Wed 5/20/09	33	$0.00	SNWA (ER and SWR)
35	100%	Revised design draft to ER/SWR	3 days	Thu 5/21/09	Mon 5/25/09	34	$0.00	SNWA (PI)
36	100%	Revised design draft comments to PI	4 days	Tue 5/26/09	Fri 5/29/09	35	$0.00	SNWA (ER and SWR)
37	100%	Submit interpretive panels to stakeholders for review	11 days	Wed 6/3/09	Wed 6/17/09		$0.00	SNWA (ER and PI)
38	0%	Submit panels for construction	15 days	Thu 7/2/09	Wed 7/22/09		$1,300.00	SNWA (PI)
39	0%	Install panels on sign	1 day	Fri 8/28/09	Fri 8/28/09	27,38	$0.00	SNWA (ER)
40	0%	Construct and install bird blind/viewing tower	25 days	Thu 10/1/09	Wed 11/4/09	22	$0.00	Boy Scouts of America
41	**54%**	**3.2 Vegetation**	**158 days**	**Wed 2/11/09**	**Fri 9/18/09**		**$67,382.00**	**Multiple**
42	**56%**	**3.2.1 Clearing**	**141 days**	**Tue 3/3/09**	**Tue 9/15/09**		**$34,382.00**	**Multiple**
43	100%	Contact "Call Before You Dig"	1 day	Mon 6/1/09	Mon 6/1/09		$0.00	SNWA (SWR)
44	100%	Clear bathroom/commissary house and boat dock	10 days	Mon 5/18/09	Fri 5/29/09		$12,382.00	Construction Group International
45	52%	Clear salt cedar and spray with herbicide	141 days	Tue 3/3/09	Tue 9/15/09		$22,000.00	NDF
46	**68%**	**3.2.2 Irrigation**	**133 days**	**Wed 2/25/09**	**Fri 8/28/09**		**$8,000.00**	**Multiple**
47	100%	Conduct irrigation design	67 days	Thu 2/26/09	Fri 5/29/09		$0.00	SNWA (ER) and WaterTech
48	100%	Install well pump	60 days	Mon 6/1/09	Fri 8/21/09	47	$0.00	SNWA (ER) and LVVWD
49	35%	Purchase/borrow irrigation piping and dripline	113 days	Wed 2/25/09	Fri 7/31/09		$5,000.00	SNWA (ER) and Reclamation
50	0%	Install above ground drip irrigation system	5 days	Mon 8/24/09	Fri 8/28/09	48,49	$3,000.00	NDF and Native Resources
51	**1%**	**3.2.3 Planting**	**158 days**	**Wed 2/11/09**	**Fri 9/18/09**		**$25,000.00**	**Multiple**
52	100%	Reserve plants from nursery	1 day	Wed 2/11/09	Wed 2/11/09		$0.00	SNWA (ER)
53	0%	Deliver/purchase plants	46 days	Wed 4/29/09	Wed 7/1/09	52	$15,000.00	NDF, MSWN, and NPS
54	**0%**	**Prepare site for planting**	**10 days**	**Mon 8/31/09**	**Fri 9/11/09**		**$5,000.00**	**Boy Scouts of America and Native Resources**
55	0%	Dig holes	10 days	Mon 8/31/09	Fri 9/11/09	50	$3,000.00	Boy Scouts of America and Native Resources
56	0%	Construct protective fencing	10 days	Mon 8/31/09	Fri 9/11/09	50	$2,000.00	Boy Scouts of America and Native Resources
57	0%	Plant plants	5 days	Mon 9/14/09	Fri 9/18/09	54,53	$5,000.00	Boy Scouts of America and Native Resources
58	20%	3.3 Trash/Debris Removal	163 days	Tue 3/3/09	Thu 10/15/09		$1,000.00	NDF and Native Resources
59	**75%**	**3.4 Permits**	**129 days?**	**Sun 3/15/09**	**Thu 9/10/09**	**70**	**$2,050.00**	**SNWA**
60	**100%**	**Dust permit**	**56 days**	**Sun 3/15/09**	**Mon 6/1/09**		**$500.00**	**SNWA**
61	100%	Apply for dust permit for parking lot	25 days	Sun 3/15/09	Sun 4/19/09		$250.00	SNWA (ER and SWR)
62	100%	Receive dust permit	0 days	Mon 4/20/09	Mon 4/20/09	61	$0.00	SNWA (ER and SWR)
63	100%	Install dust permit sign	30 days	Tue 4/21/09	Mon 6/1/09	62	$250.00	SNWA (PI)
64	**5%**	**Grading/building permits**	**62 days**	**Wed 6/17/09**	**Thu 9/10/09**		**$1,000.00**	**SNWA**
65	50%	Apply for grading/building permit (if required)	1 day	Wed 6/17/09	Wed 6/17/09		$500.00	SNWA (ER and SWR)
66	0%	Receive grading/building permit (if required)	10 days	Fri 8/28/09	Thu 9/10/09	65	$500.00	SNWA (ER and SWR)
67	50%	Kiosk sign permit	22 days?	Mon 8/3/09	Tue 9/1/09		$0.00	Bullhead City Signworks
68	0%	Desert tortoise mitigation fees	1 day?	Wed 6/17/09	Wed 6/17/09		$550.00	SNWA (ER and SWR)
69	**97%**	**3.5 Public Involvement**	**142 days**	**Tue 4/14/09**	**Wed 10/28/09**		**$0.00**	**SNWA (ER and SWR)**
70	100%	Submit SIP to Laughlin TAB for public comment	34 days	Tue 4/14/09	Fri 5/29/09		$0.00	SNWA (ER and SWR)
71	0%	LCR MSCP steering committee tour	1 day	Wed 10/28/09	Wed 10/28/09		$0.00	SNWA (ER and SWR)
72	**0%**	**4.0 Maintenance and Monitoring**	**664 days**	**Tue 3/3/09**	**Fri 9/16/11**		**$15,000.00**	**Multiple**
73	**0%**	**4.1 Maintenance (as needed)**	**520 days**	**Mon 9/21/09**	**Fri 9/16/11**		**$15,000.00**	**NDF and Native Resources**
74	0%	4.1.1 Vegetation Improvements	104 wks	Mon 9/21/09	Fri 9/16/11	57	$10,000.00	NDF and Native Resources
75	0%	4.1.2 Trash, Trails, and Other Facilities	104 wks	Mon 9/21/09	Fri 9/16/11	57	$5,000.00	NDF and Native Resources
76	**5%**	**4.2 Monitoring**	**434 days**	**Tue 3/3/09**	**Fri 10/29/10**		**$0.00**	**SNWA (ER)**
77	100%	Establish photo points	4 days	Tue 3/3/09	Fri 3/6/09		$0.00	SNWA (ER)
78	0%	Site performance monitoring year 1	8 wks	Mon 9/21/09	Fri 11/13/09	57	$0.00	SNWA (ER)
79	0%	Site performance monitoring year 2	8 wks	Mon 9/6/10	Fri 10/29/10	57	$0.00	SNWA (ER)
80	**0%**	**Reporting**	**296 days**	**Mon 11/16/09**	**Mon 1/3/11**		**$0.00**	**SNWA (ER)**
81	0%	Prepare year 1 annual report	45 days	Mon 11/16/09	Fri 1/15/10	78	$0.00	SNWA (ER)
82	0%	Submit year 1 annual report to stakeholders	1 day	Mon 1/18/10	Mon 1/18/10	81	$0.00	SNWA (ER)
83	0%	Prepare year 2 annual report	45 days	Mon 11/1/10	Fri 12/31/10	79	$0.00	SNWA (ER)
84	0%	Submit year 2 annual report to stakeholders	1 day	Mon 1/3/11	Mon 1/3/11	83	$0.00	SNWA (ER)
85	**0%**	**Implement Phase II of the SIP (as needed)**	**60 days**	**Mon 2/1/10**	**Fri 4/23/10**		**$20,000.00**	**SNWA Contractor TBD**
86	**0%**	**3.0 Improvement Plan**	**60 days**	**Mon 2/1/10**	**Fri 4/23/10**		**$20,000.00**	**SNWA Contractor TBD**
87	**0%**	**3.1 Facilities**	**60 days**	**Mon 2/1/10**	**Fri 4/23/10**		**$20,000.00**	**SNWA Contractor TBD**
88	**0%**	**3.1.1 Parking Amenities**	**60 days**	**Mon 2/1/10**	**Fri 4/23/10**		**$20,000.00**	**SNWA Contractor TBD**
89	0%	Improve existing parking lot for bus parking	60 days	Mon 2/1/10	Fri 4/23/10		$20,000.00	SNWA Contractor TBD

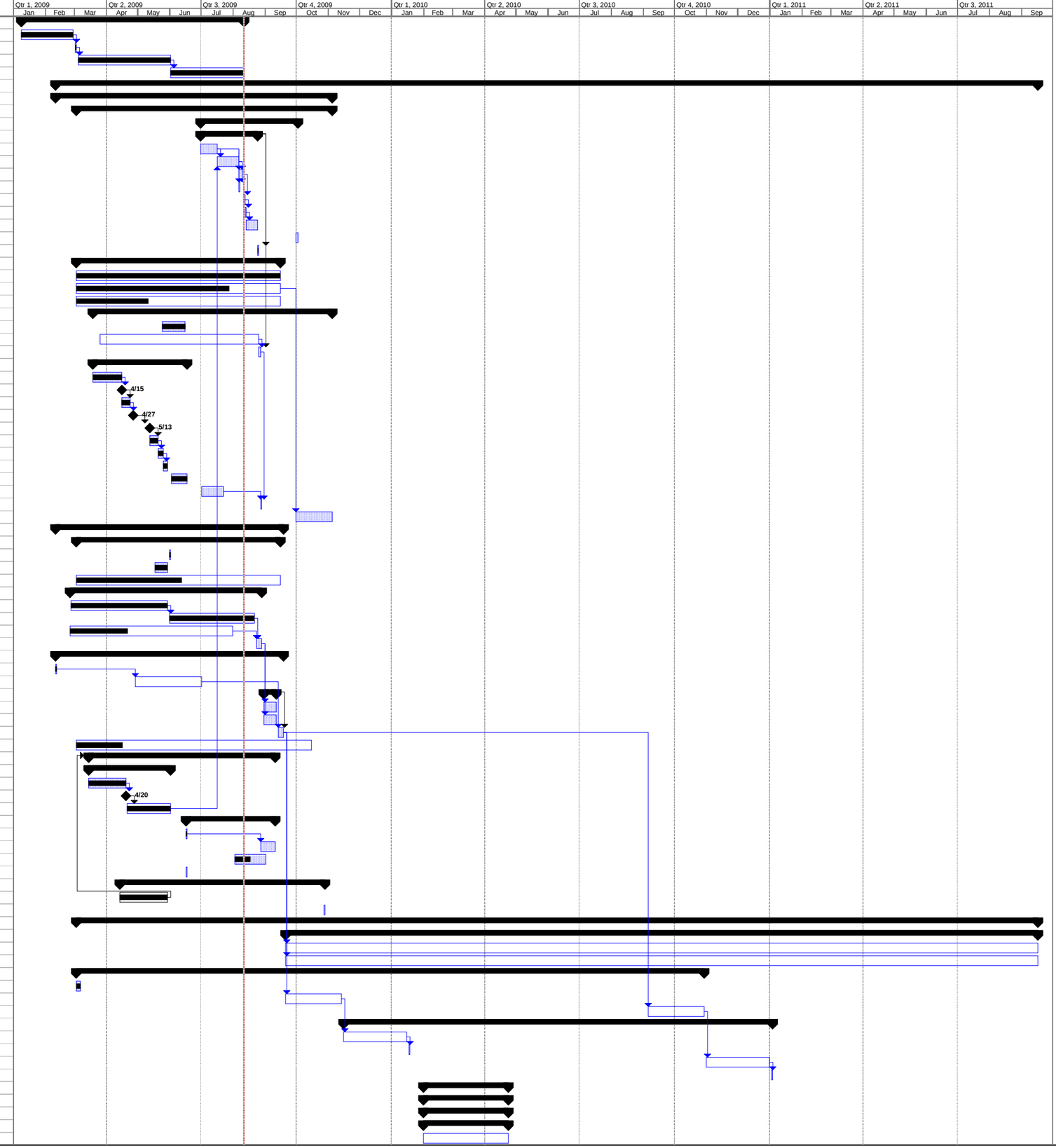

Project: Boy Scout Property
Date: Tue 8/11/09

Task | Split | Progress | Milestone | Summary | Project Summary | External Tasks | External Milestone | Deadline

6.0 LITERATURE CITED

Braun-Blanquet, J. 1965. Plant sociology: the study of plant communities. London: Hafner.

CertainTeed Corporation. 2008. Product Information Sheet for Certa-Lok™ Yelomine™ Restrained Joint PVC Pressure Piping System. CertainTeed Corporation, Valley Forge, Pennsylvania.

Daubenmire, R. 1959. A canopy-coverage method. Northwest Science 33: 43-64.

Engel-Wilson, R., and R. Ohmart. 1978. Floral and attendant faunal changes on the Lower Rio Grande between Fort Quitman and Presidio, TX. *In* Proceedings of the National Symposium on Strategies for Protection and Management of Floodplain Wetlands and Other Riparian Ecosystems, pp. 139–147.

Flora of North America Editorial Committee, eds. 1993+. Flora of North America North of Mexico. 12+ vols. New York and Oxford.

Gavlak, R., D. Horneck, R.O. Miller, and J. Kotuby-Amacher. 2003. Soil, plant and water reference methods for the western region, second edition. WREP 125.

Hunter, W., R. Ohmart, and B. Anderson. 1988. Use of exotic saltcedar (*Tamarix chinensis*) by birds in arid riparian systems. Condor 90: 113–123.

Lowry, J.H., R.D. Ramsey, K. Boykin, D. Bradford, P. Comer, S. Falzarno, W. Kepner, J. Kirby, L. Langs, J. Prior-Magee, G. Manis, L. O'Brien, K. Pohs, W. Reith, T. Sajwaj, S. Schrader, K. Thomas, D. Schrupp, K. Schulz, B. Thompson, C. Wallace, C. Velasquez, E. Waller, and B. Wolk. 2005. The southwest regional gap analysis project: final report on land cover mapping methods. RS/GIS Laboratory, Utah State University, Logan, Utah.

Ohmart, R., B. Anderson, and W. Hunter. 1988. Ecology of the Lower Colorado River from Davis Dam to the Mexico-United States boundary: a community profile. Alexandria, VA: National Technical Information Service.

Soil Survey Staff, Natural Resources Conservation Service, United States Department of Agriculture. Web Soil Survey. Available online at http://websoilsurvey.nrcs.usda.gov/ accessed 21 January 2009.

Bureau of Reclamation (Reclamation). June 2008. Final implementation report, fiscal year 2008 work plan and budget, fiscal year 2007 accomplishment report. Lower Colorado River Multi-Species Conservation Program. Boulder City, Nevada.

USDA, NRCS. 2009. The PLANTS Database (http://plants.usda.gov, 16 January 2009). National Plant Data Center, Baton Rouge, Louisiana.

Zavaleta, E. 2000. The economic value of controlling an invasive shrub. Ambio 29: 462-467.

Appendix A

Soil Conductance Contours for the Boy Scout Property

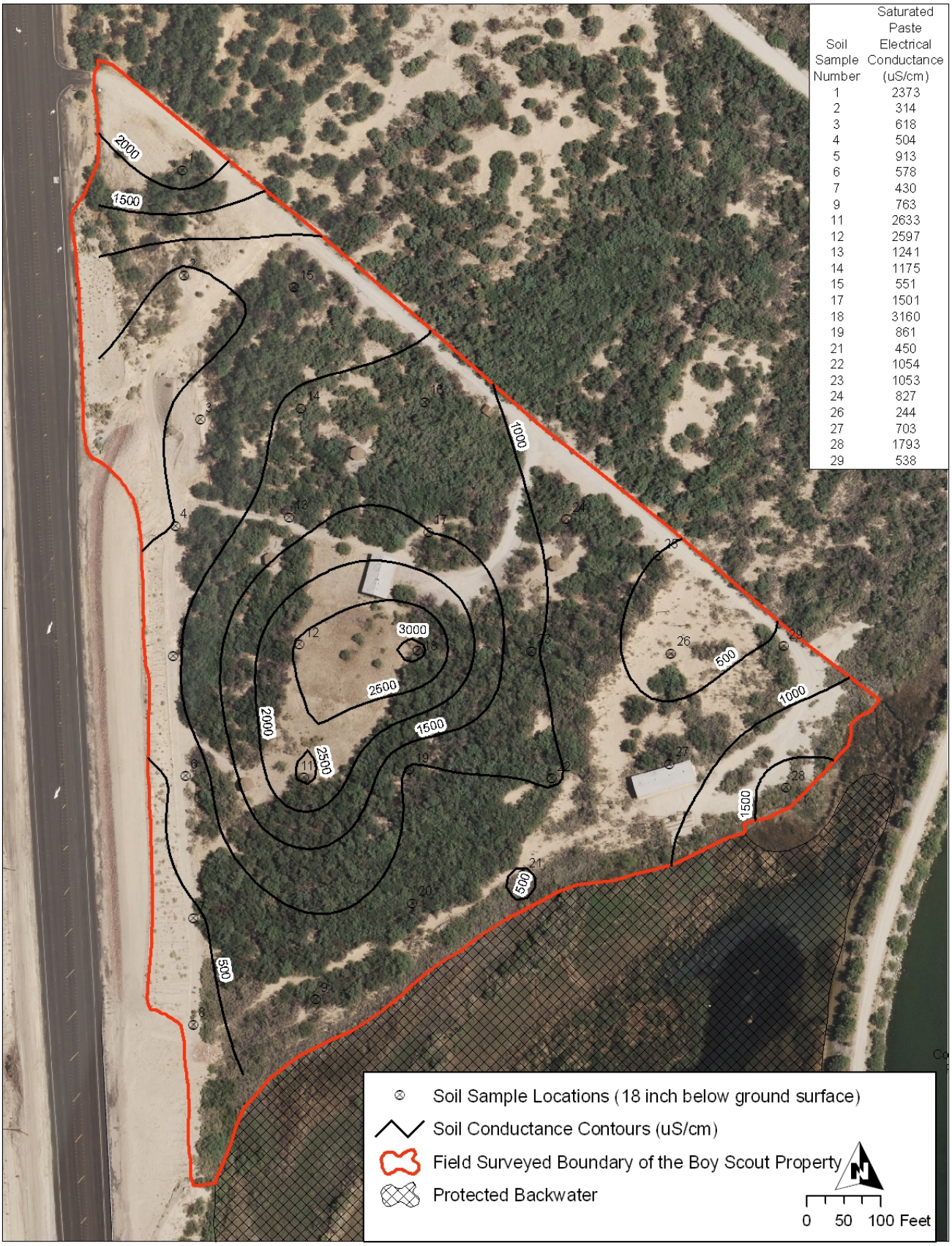

Soil Sample Number	Saturated Paste Electrical Conductance (uS/cm)
1	2373
2	314
3	618
4	504
5	913
6	578
7	430
9	763
11	2633
12	2597
13	1241
14	1175
15	551
17	1501
18	3160
19	861
21	450
22	1054
23	1053
24	827
26	244
27	703
28	1793
29	538

Appendix B

Depth to Water Contours for the Boy Scout Property

22
13.333
13.583
18
7.5
Field Surveyed Boundary of the Boy Scout Property
Protected Backwater
Depth to Water Measurements (feet)
Depth to Water Contours (feet)
0 50 100 Feet

Appendix C

Field Notes from the Bureau of Reclamation for Two Groundwater Wells

Well In Building # 1

Boy Scout Camp Laughlin N

PUMP INFO **LOCATION** Big Bend Conservation Area

DATE - 7-29-08 **W.O.#** M46614 ~~INSTALL~~ / REMOVAL

BOWLS

Grundfos

SIZE- 4"
STAGES- 7
RPM 3450
DESIGN CAP- 40 Gpm @ 144'
P.C. SERIAL# 40620-7
LENGTH- 19½"
DEPTH TO TOP
56.7' OF BOWLS- 55.0"
Intake #on pump P.9317

COLUMN PIPE

20'- 2
10'- 18
5'-
MILD STEEL / ~~SS~~
DIA- 2"
~~FLANGED~~/THREADED
TAIL PIPE Ø
TOTAL DEPTH- 58.11"

SHAFT

DIA-
300 OR 400 SERIES
SLEEVED/YES/NO
HEADSHAFT
LENGTH
MOTORSHAFT
LENGTH
DIA

WELL INFO

STATIC LEVEL- 13.4'
PUMPING LEVEL-
INDICATOR GPM
DEPTH OF WELL 99.7
DESIGN DEPTH
CASING DIA 8"
SANDCONE Ø
E.C.
Well Stickup 22"

MOTOR INFO

Kva code G

HP- 2
S/N- 2243011916
AMPS- 10.0 Max amps 13.2
VOLTS 230
PHASE- 1
RPM- 3450
TYPE-
MFG Franklin Elec
SUB CABLE SIZE #12 Awg
S.F 1.25 KW 1.5

FLOW METER

MFG -
DIA-S/N#
GPM / AF / CFS
TOTALIZER
DAMAGEDMETER
MFG-
DIA-S/N#
GPM / AF / CFS
TOTALIZER

DISCHARGE HEAD

2" x 8"
MFG - Sanitary Seal
SERIAL #
PSI

MISC Motor Length - 15"

SOUNDING TUBE LENGTH -
ELEC HR METER READING - N/A

GPM 1000 ÷ TOTAL SECONDS × 60 = TIMED GPM
AF 3258 ÷ TOTAL SECONDS x 60 = TIMED GPM
CFS 448 ÷ TOTAL SECONDS × 448 = TIMED GPM
NOTE; TOTAL SECONDS IS ONE FULL REVOLUTION OF TOTALIZER

AMP READINGS

CREW MF JW

COMMENTS;

8-28-08

Boy Scout Camp wells

Well in House

Franklin Elec.
Model: 2243011916

H.P. 2	PH 1
Hz 60	KVA Code G
Volt 230	S.F. 1.25
Amp 10.0	MAX Amps 13.2
Kw 1.5	Cont.
RPM 3450	3 wire Sub motor

Pump GrunDFos
9317
Type SP
PC. 40620-7
40 GPM @ 144'
RPM 3450
HP 2

Pipe 2" - 55'
Pump Depth - 56.7"
Total Depth - 58'-11"
Pump 19 1/2
Motor 15"

Well Diameter - 8"
well Depht 99.7'
well Stick up 1'.5" 101' To Top of Casing
Static water level 13'.4"
well Stick up 22"

well #2 By Gate

Boy Scout Camp Laughlin

PUMP INFO **LOCATION** Big Bend Conservation Area

DATE - 7-28-08
Nov. 1990 Goulds

W.O.# M46614

~~INSTALL~~ / REMOVAL

BOWLS 70FG5ØR LOWARA

SIZE- 4"
STAGES-
RPM 3450
DESIGN CAP-
SERIAL# 05-90
LENGTH- 4'
DEPTH TO TOP OF BOWLS- 94'
Bowl Intake 98'

COLUMN PIPE

20'- 4
10'- 1
5'- 0
MILD STEEL ~~S.S~~
DIA- 2"
~~FLANGED~~/THREADED
TAIL PIPE 0
TOTAL DEPTH- 100'-6"

SHAFT

DIA-
300 OR 400 SERIES
SLEEVED/YES/NO
HEADSHAFT
LENGTH
MOTORSHAFT
LENGTH
DIA

WELL INFO

7-30-08 15'
Goulds
STATIC LEVEL- 22'
PUMPING LEVEL- Dry
INDICATOR GPM
DEPTH OF WELL 101'
DESIGN DEPTH
CASING DIA 8"
SANDCONE
E.C.

well Depth Top of casing 103'

MOTOR INFO

L90-27-1425
HP- 5
Model ~~SAF~~ 2243037009
AMPS- 23.0 Sf amp amps 27.5
VOLTS 230
PHASE- 1
RPM- 3450
TYPE- Submersible
MFG Franklin Elec.
SUB CABLE SIZE #12 AWG
33451914

FLOW METER

MFG -
DIA-S/N#
GPM / AF / CFS
TOTALIZER
DAMAGEDMETER
MFG-
DIA-S/N#
GPM / AF / CFS
TOTALIZER

DISCHARGE HEAD

2"x8"
MFG - Sawtang Seal
SERIAL #
PSI

MISC

SOUNDING TUBE LENGTH -
ELEC HR METER READING -

GPM 1000 ÷ TOTAL SECONDS × 60 = TIMED GPM
AF 3258 ÷ TOTAL SECONDS x 60 = TIMED GPM
CFS 448 ÷ TOTAL SECONDS × 448 = TIMED GPM
NOTE; TOTAL SECONDS IS ONE FULL REVOLUTION OF TOTALIZER

AMP READINGS

CREW MF JW

COMMENTS; Motor 30" Long
Type S

#2

Well By Gate

7-28-08

- L 90-27-1425
  - 334517914
- Franklin Elec.
- Model# 2243037004
  V 230
- RPM 3450
  KVA Code F
- Hp 5
- Amp 23.0
- SF max Amp 27.5

- PH 1
  KW 3.7
  Hz 60
  Cont Duty
  SF 1.15

Goulds
70FG50R
05-90

Type SP
Type FG50R

- 94'-2" Black Pipe
  - 98" To pump Intake

Motor 30" Long
Pump 4' Long

Well Diameter 8"
well Stick up 30"
well Depth To Top of Casing 103'

- Well Depth 101'
  Static Level 22'
  Static Level 15' 7-30

Big Bend Conservation Area
(boy scout camp Laughlin,Nv. Well #2 by gate)

Static water level was at 22 feet, installed 99 feet of test pump, Pumped well for approximately four minutes with valve opened 100%. At that time the well pumped dry. Waited for approximately forty-five minutes for well to recover and well would only recover to a static of fifty feet, attempted pump test three more times with valve 98% closed and well would never fully recover or produce enough water to fully complete a pump test. With the information provided by the pump test, along with a video of this well, it seems as though this well will need to be rehabbed in some way. It is possible the slots cut in the casing to allow the water to flow into the well are plugged up and may need to be re-slotted or cleaned.

7-28-08

Boy Scout Camp wells

Well in House

#12 ga wire

Franklin Elec.
Model: 2243011916

H.P. 2	PH 1
Hz 60	KVA Code G
Volt 230	S.F. 1.25
Amp 10.0	MAX Amps 13.2
Kw 1.5	Cont.
RPM 3450	3 wire Sub motor

Pump Grundfos
9317
Type SP
Pc. 40620-7
40 gpm @ 144'
RPM 3450
HP 2

Pipe 2" - 55'
Pump Depth - 56.7"
Total Depth - 58'-11"
Pump 19 1/2
Motor 15"

Well Diamiter - 8"
well Depht 99.7'
well Stick up 1'.5"
Static water level 13'.4"
well Stick up 22"

Sanitary Seal 2"x8'

101' To Top of Casing

#2

Well By Gate

9-28-08

#12 [illegible]

- L 90-27-1425
  - 334517914
- Franklin Elec.
- Model # 2243037004
  V 230
- RPM 3450
  KVA Code F
- Hp 5
- Amp 23.0
- SF max Amp 27.5

- PH 1
  KW 3.7
  Hz 60
  Cont Duty
  SF 1.15

Goulds
70FG50R
05-90

Type SP
Type FG50R

- 94'-2" Black Pipe
  - 98" To pump Intake

Motor 30" Long
Pump 4' Long

Well Diameter 8"
well Stick up 30"
well Depth To Top of Casing 103'

- Well Depth 101'
  Static level 22'
  Static Level 15' 7-30-09
  Sanitary Seal 2" x 8"

YUMA DESALTING PLANT LABORATORY
DATA ANALYSIS

Date Sampled: 07/29/2008 Date Completed: 08/08/2008 Date Released: 08/12/2008

Client: BOR Sampler: YAO maint
Sample Time: 15:10

Comments/Notes: Big Bend Conservation Area.
(Boy Scout Camp) Laughlin,NV.
call Mike Fairchild x8174.

Order Number	Site Code	Description of SiteCode
29512	W0998	OPERATIONS DIVISION MISCELLANEOUS

Test Name	Result	UNITS
Bicarbonate as CaCO3	317	mg/L
Bicarbonate	387	mg/L
Carbonate as CaCO3	0.00	mg/L
Carbonate	0.00	mg/L
Hydroxide as CaCO3	0.00	mg/L
Hydroxide	0.00	mg/L
Conductivity	4200	uS/cm @25 C
Chloride	533	mg/L
Flouride	<1.0	mg/L
Nitrite as N	<5.0	mg/L
Nitrate as N	<5.0	mg/L
PO4 as P	<5.0	mg/L
Sulfate	1330	mg/L
Calcium as CaCO3	1115.00	mg/L
Magnesium as CaCO3	492	mg/L
Total Hardness as CaCO3	1610	mg/L
Boron	<1.0	mg/L
Barium	0.058	mg/L
Calcium	446	mg/L
Iron	<1.0	mg/L
Potassium	9.2	mg/L
Magnesium	120	mg/L
Manganese	3.27	mg/L
Sodium	376	mg/L
Silicon Dioxide	29.8	mg/L
Strontium	4.88	mg/L
P-Alkalinity as CaCO3	0.00	mg/L
pH	7.88	
pH Temperature	22.3	C
Total Alkalinity as CaCO3	317	mg/L
Sum of Anion Milliequivalents	49.2	meq
Sum of Cation Milliequivalents	48.7	meq
Total Sum (Bicarbonate Corrected)	3040	mg/L
Percent Difference Cation Anion	-0.51	%

YUMA DESALTING PLANT LABORATORY
DATA ANALYSIS

Date Sampled: 07/29/2008 Date Completed: 08/08/2008 Date Released: 08/12/2008

Client: BOR Sampler: YAO maint
Sample Time: 15:10

Comments/Notes: Big Bend Conservation Area.
(Boy Scout Camp) Laughlin,NV.
call Mike Fairchild x8174.

Order Number	Site Code	Description of SiteCode		
Total Salt to Conductivity Ratio			0.723	
Total Salt			3200	mg/L
Total Sum of Major Analytes			3230	mg/L
Total Dissolved Solids @ 180 C			3230	mg/L
Temperature Degrees C			23.0	C

Name Big Bend Convention Area Boy Scout Camp Laughlin NV.

Step Drawdown

Well No. 1 in Building

7-186

REV 09-96

Bureau of Reclamatiom

AF or GPM

Static Water Level 13.6

Date 7-29-08

Totalizer 15234 / 15404

Hr. Meter 332.2 / 334.9 } 2.7 Hrs

Totalizer		Time	Q	Pumping Level	Seconds	G.P.M.	
15234	1	2:30 P		start	44'10"	200	Valve Full open 100%
15252	2	2:50 P			36'7"	150	
15270	3	3:00 P			34'1"	150	
15287	4	3:10 P			32'3"	150	Temp 23°C water sample
15300	5	3:20 P			33'0	150	
15317	6	3:30 P			31'5"	140	
15328	7	3:40 P			33'4"	140	Tested flow meter — 138.333 GPM
15332	8	3:45 P			25'5"	100	Valved Down 50% open
15348	9	3:55 P			24'9"	100	
15356	10	4:05 P			24'7"	100	
15376	11	4:25 P			24'7"	100	
15386	12	4:35 P			24'7"	100	
15387	13	4:40 P			17'10"	50	Valved Down 25% open
15393	14	4:50 P			17'10"	50	
15399	15	5:00 P			17'10"	50	
15404	16	5:10 P			17'10"	50	
	17						
	18						

EFF TEST

METER FACTOR 15234 / 15404

DISC REV

FLOW

SAND TEST 0

DISC SEC

SPIGOT HEIGHT 2'8"

COMPLETE

PUMP LEVEL

Pressure vaccum

EC

REMARKS

T:\4600\Forms\DRAWTEST.XLS

7-29-08

Installed 3-21' x 3" pipe } 73' pipe + 2½' pump = 75'
1-10' x 3" pipe } Total De
Pump motor

Started pump @ 15234 2 50/pm STATIC 13'.6" Rusty comes out 15234 meter
START up DRAW DOWN 44'.10" 2 30/pm 200 GPM
Temp 23°C 15252 36'.7" 2 50/pm SAND 0 150 GPM
15270 34.1" 3 00/pm 0 150 GPM
water Sample 23°C 15287 32'.5" 3 10/pm 0 150 GPM
15300 33'.0 3 20/pm 0 150 GPM
15317 31'.5" 3 30/pm 0 140 GPM
138.333 Gal per min.
15328 33'.4" 3 40/pm 0 140 GPM
15332 25'.5" 3 45/pm 0 100 GPM
15348 24.9" 3 55/pm 0 100 GPM
15356 24.7 4 05/pm 0 100 GPM
15376 24.7 4 25/pm 0 100 GPM
15386 24.7 4 35/pm 0 100 GPM
15387 17.10 4 40/pm 0 50 GPM
15393 17.10 4 50/pm 0 50 GPM
15399 17.10 5 00/pm 0 50 GPM
15404 17.10 5 10/pm 0 50 GPM

Appendix D

Design and Construction Specifications from
Republic Services of Nevada to Build a 3 Yard Trash Enclosure

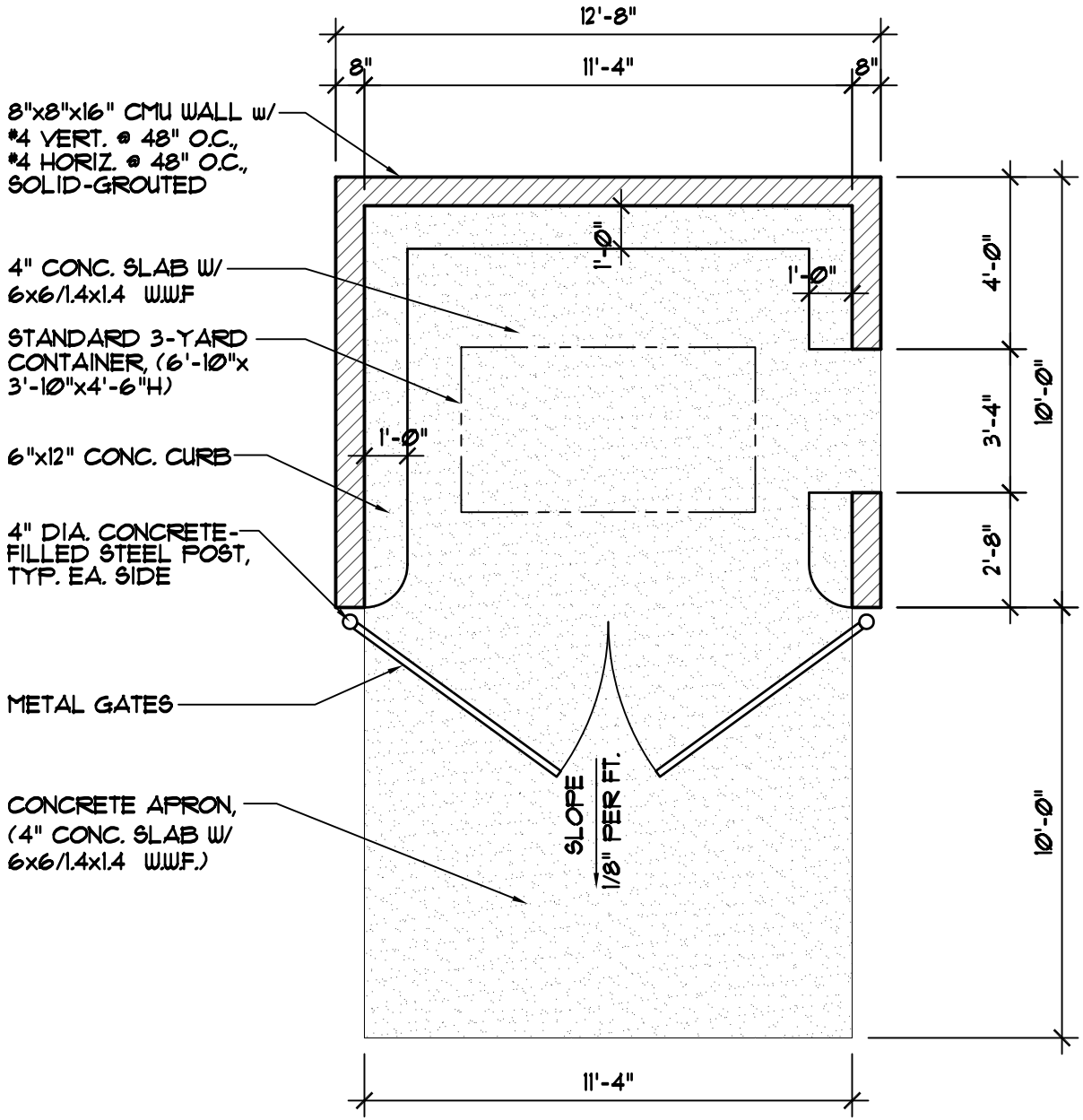

1

FLOOR PLAN

SCALE: 1/4"=1'-0"

SINGLE-CONTAINER ENCLOSURE

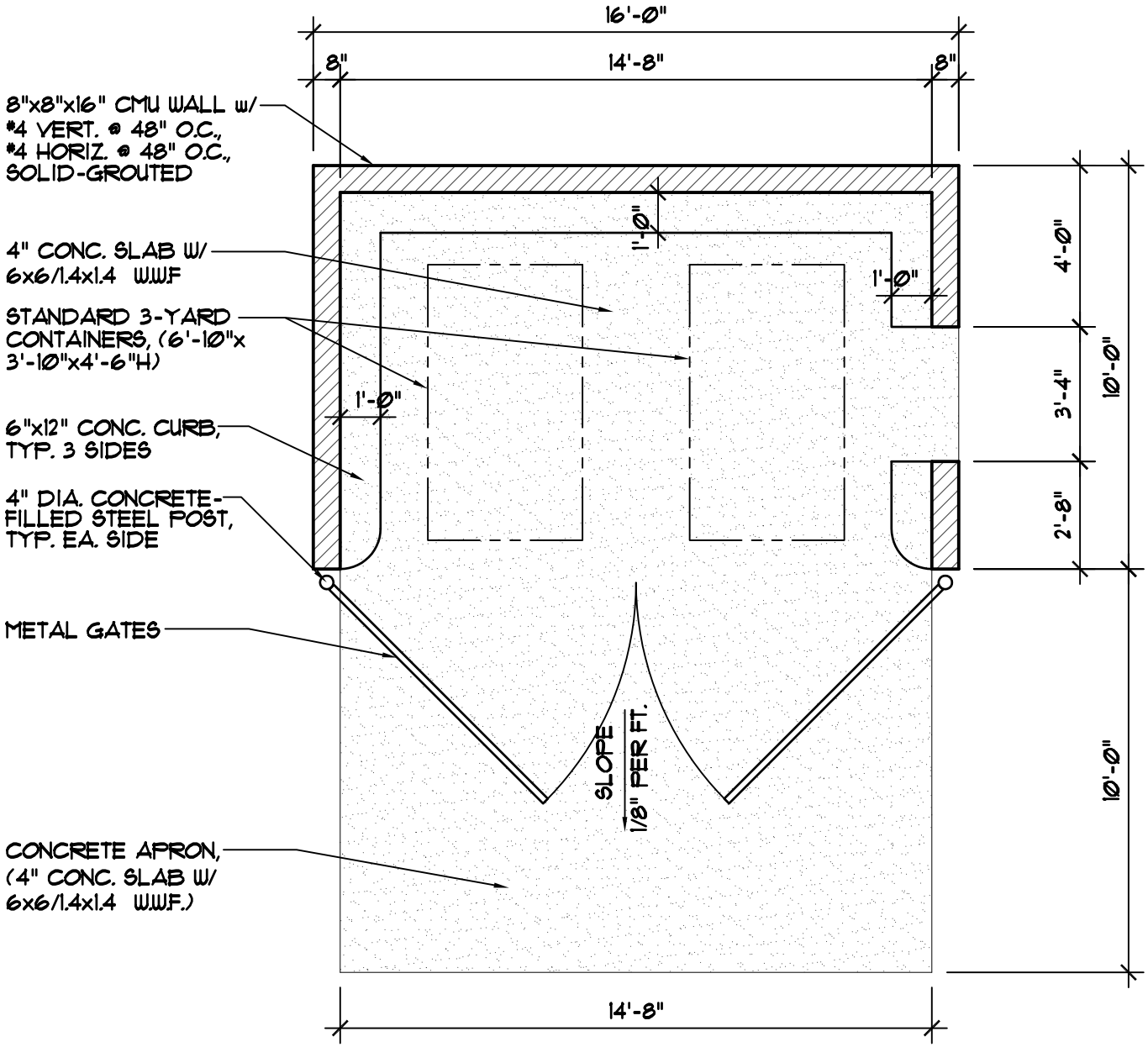

1

FLOOR PLAN

SCALE: 1/4"=1'-0"

TWO-CONTAINER ENCLOSURE

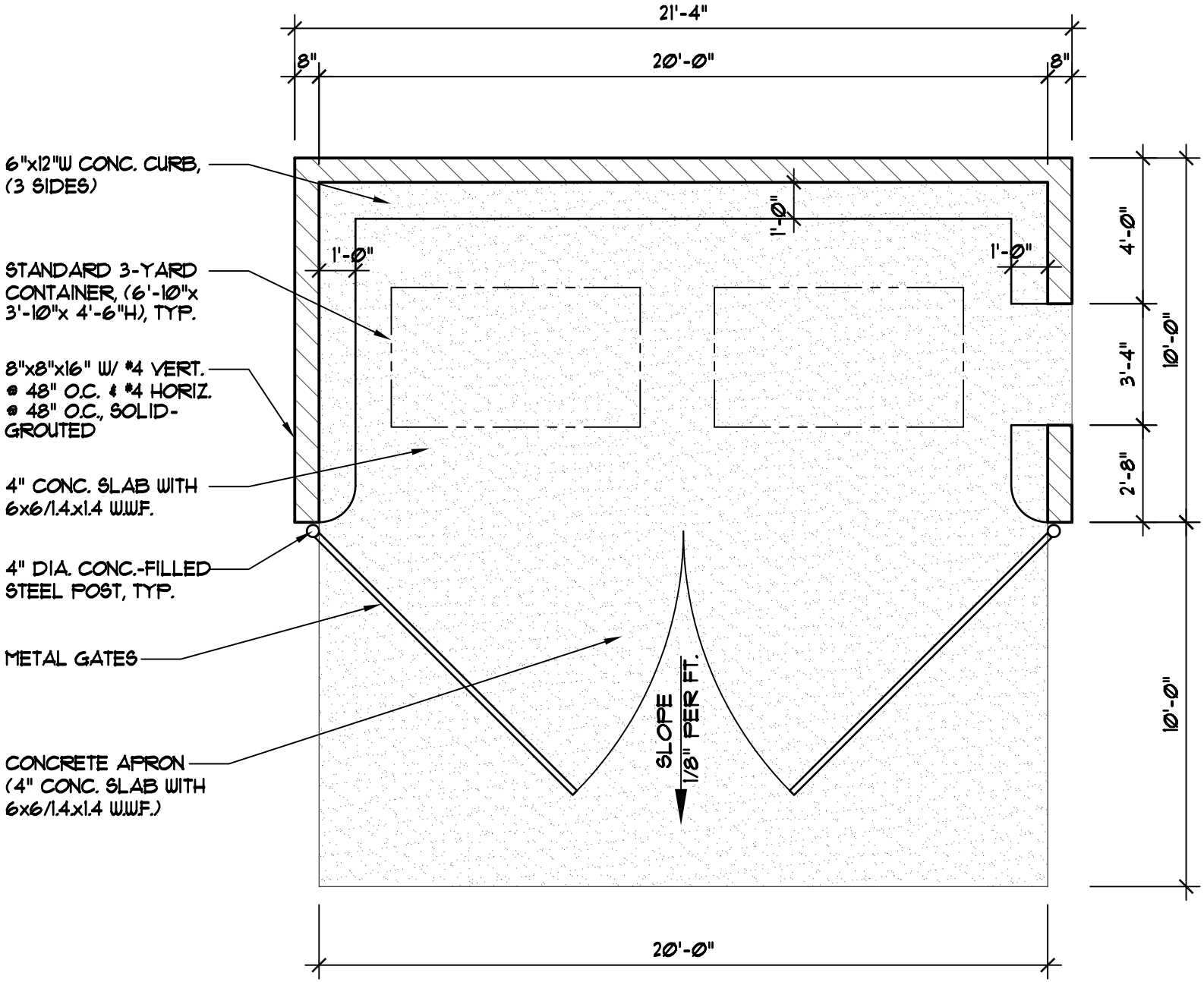

1

FLOOR PLAN

SCALE: 1/4"=1'-0"

TWO-CONTAINER ENCLOSURE

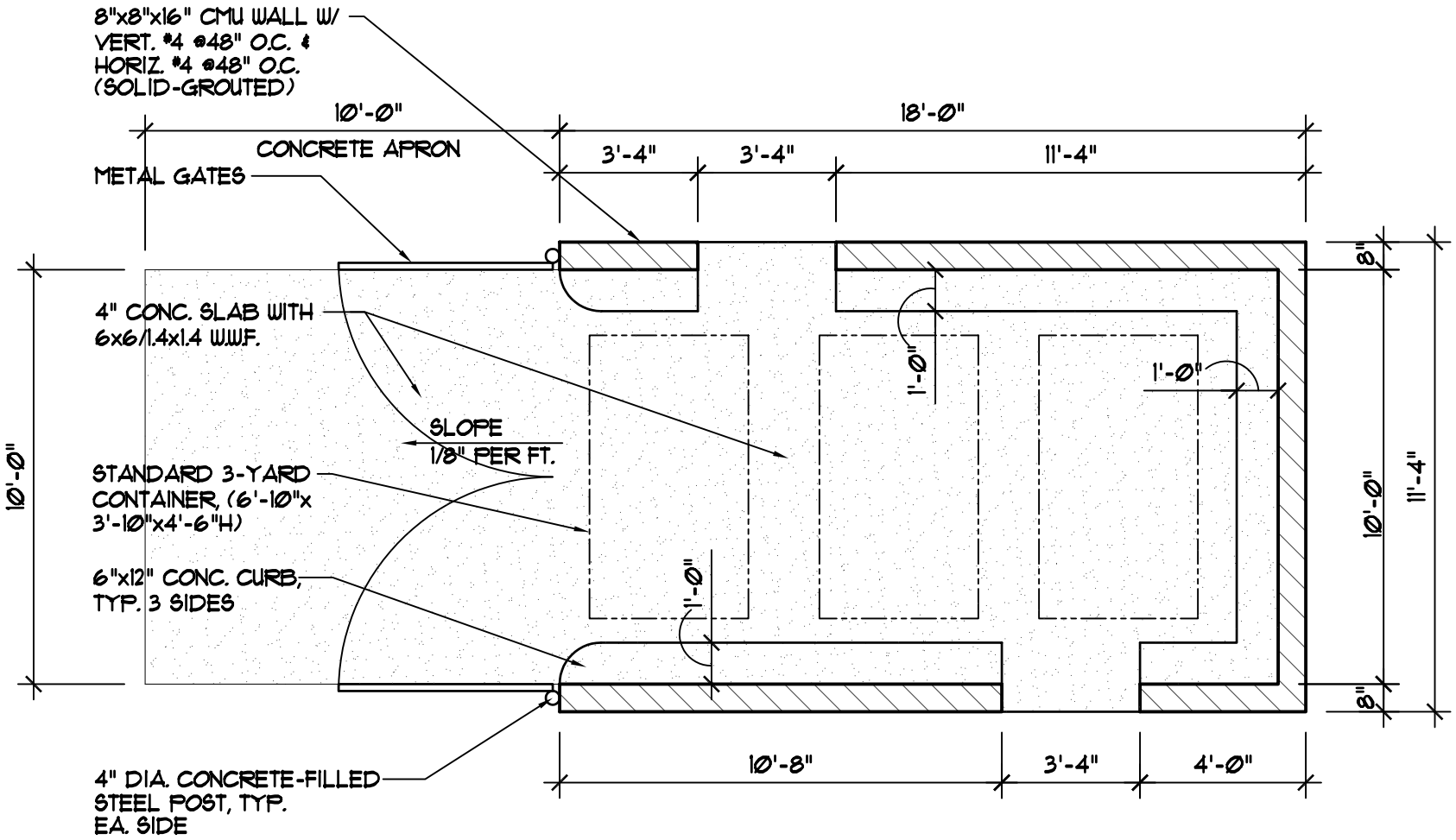

1

FLOOR PLAN

SCALE: 1/4"=1'-0"

THREE-CONTAINER ENCLOSURE

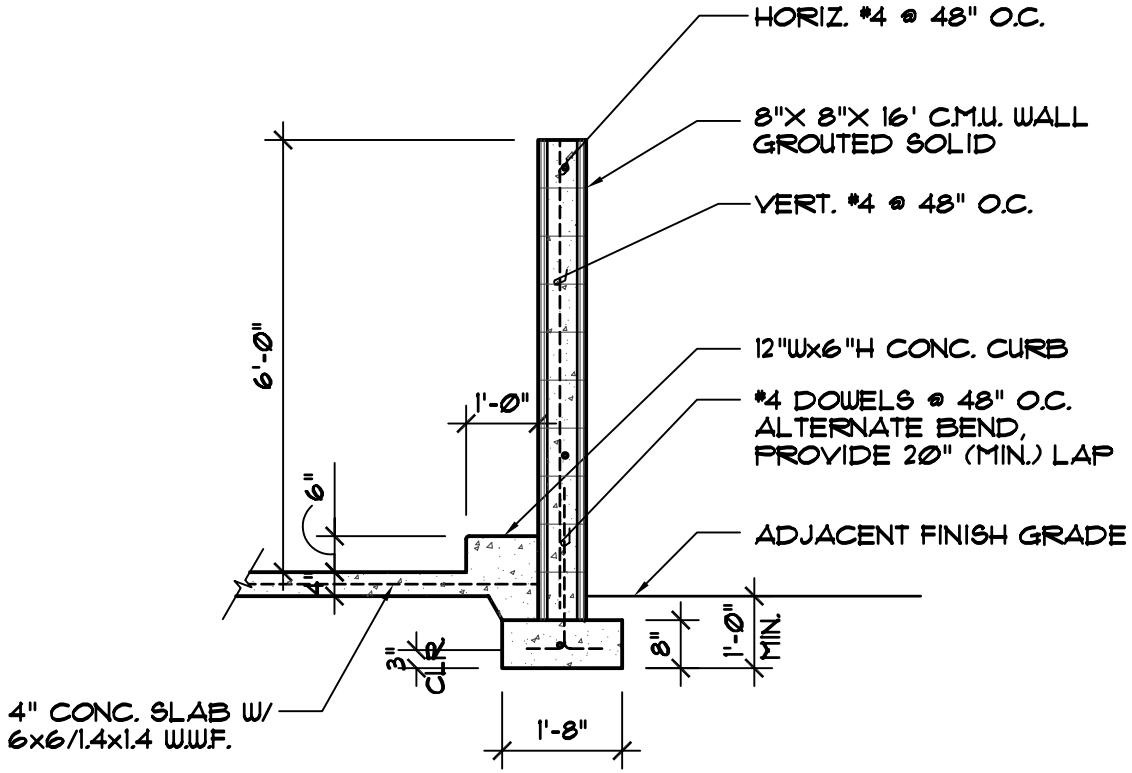

NOTE:

THIS WALL DESIGN IS PROVIDED AS THE MINIMUM REQUIREMENTS. AN ENGINEERED DESIGN MAY TAKE PRECEDENCE TO COMPLY WITH BUILDING DEPARTMENT REQUIREMENTS

1

TYP. WALL SECTION

SCALE: 3/8"=1'-0"

Appendix E

Cost Estimate from the Bureau of Reclamation to
Mechanically Clear the Boy Scout Property

Construction Cost Estimate

Equipment	Rental Duration			Rental Rates				Fuel Costs			
	Days	Weeks	Months	Day	Week	Month	Cost	Fuel Usage (gal/hr)	Hours Used	Fuel Cost ($/gal)	Cost
Trackhoe 320L							$0				$0
Dozer D6D		2			$3,200		$6,400	5	60	$2.75	$825
Trackhoe PC 300		2			$3,100		$6,200	5	60	$2.75	$825
Loader 938F							$0				$0
710 B Backhoe							$0				$0
555 4WD Backhoe							$0				$0
Dump Truck 25 Ton Off Highway		2			$4,000		$8,000	4	60	$2.75	$660
Dump Truck 25 Ton Off Highway							$0				$0
Sheepsfoot Compactor							$0				$0
Water Truck		2			$2,500		$5,000	3	60	$2.75	$495
Fuel Pods							$0				
Mobile Welder							$0				$0
Trash Pumps (2)							$0				$0
Portable Generator							$0				$0
4-wheeler							$0				$0
Utility Trailer							$0				
Travel Trailers-6							$0				
Whacker							$0				$0
Water tree w/ pump							$0				$0
Gravel Box							$0				
Elec. Sub. Pump (3-inch)							$0				$0
						Rental Subtotal:	$25,600			**Fuel Subtotal:**	$2,805

Transportation	Period of use			Miles driven			Transportation Rates		
	Days	Weeks	Months	Day	Week	Month	Miles	$/mile	Cost
Support Truck 1		2			700		1,400	$0.70	$980
Support Truck 2		2			700		1,400	$0.70	$980
Support Truck 2							0		$0
Dump Truck w/ transport							0		$0
Transport	4			350			1,400	$3.50	$4,900
Service Truck							0		$0
							Transport Subotal:		$6,860
								Equipment Total:	$32,955

Materials	Quantity	Unit	Cost/Unit	Totals
				$0
				$0
				$0
				$0
				$0
				$0
				$0
				$0
				$0
				$0
				$0
Unlisted Items				$0
			Materials Total:	$0

Manpower	Rate/hr	OT Rate/hr	Hrs/Day	Per Diem	Cost/Day	Days/Week	Days	Weeks	Cost
Heavy Equipment Operator	$63	$63.00	10	$170	$800	5		2	$8,000
Heavy Equipment Operator	$63	$63.00	10	$170	$800	5		2	$8,000
Heavy Equipment Operator	$63	$63.00	10	$170	$800	5		2	$8,000
Heavy Equipment Operator	$63	$63.00	10	$170	$800	5		2	$8,000
Heavy Equipment Operator					$0				$0
Laborer 1					$0				$0
Laborer 2					$0				$0
Labor Foreman	$65	$65.00	10	$170	$820	1		2	$1,640
								Manpower Total :	$33,640

Survey Control	Hours	Rate/Hour	Per Diem	Days	Cost	Miles	$/mile	Cost
2 Man Crew					$0		$0.65	$0
Survey Chief					$0		$0.65	$0
Survey Equipment					$0			
				Survey Total:	$0		**Transport Subotal:**	$0

Supervision & Quality Control	Hours	Rate/Hour	Per Diem	Days	Cost	Miles	$/mile	Cost
Field Engineer		$101			$0		$0.58	$0
Materials Tech		$63			$0		$0.58	$0
Materials and Equipment Chief	20	$100	$170	2	$2,340	1,200	$0.58	$696
Lab Equipment								
				Supervision and Q.C. Total:	$2,340		**Transport Subotal:**	$696

Design/Oversite	Hours	Hourly Rate	Cost	Per Diem	Days	Cost	Miles	$/mile	Cost
Area Manager		$116	$0			$0		$0.65	$0
Field Engineering Manager		$100	$0			$0		$0.65	$0
Civil Engineer		$65	$0			$0		$0.65	$0
Civil Engineer		$65	$0			$0		$0.65	$0
Drafting		$49	$0	$0		$0		$0.65	$0
Design Chief		$79	$0			$0		$0.65	$0
Engineering Tech.-Contracts		$79	$0			$0		$0.65	$0
Office Engineer		$87	$0			$0		$0.65	$0
Peer Review		$105	$0			$0		$0.65	$0
Secretary	10	$40	$400			$400		**Transport Subotal:**	$0
Procurement	10	$44	$440.00			$440			
					Design Total:	$840			

Investigations of borrow areas & Misc.	Quantity	Unit	Unit Price	Value
				$0
				$0
				$0
				$0
			Total value material and equipment on site	$0

Materials and Equipment Already on site	Quantity	Unit	Unit Price	Value
				$0
				$0
				$0
				$0
				$0
			Total value material and equipment on site	$0

Subtotal for Activity:	$70,471	
10% unlisted	$7,047	(Covers equipment down time, weather delays, miscellaneous equipment and material, etc.)
Less Materials and Equip on Site:	$0	
Total for construction:	$77,518	(This is only an estimate actual charges may vary)

Appendix F

Guidelines for Planting Longstem Transplants for Riparian Restoration in the Southwest

Many Southwestern riparian sites

require revegetation following the removal of invasive woody species such as saltcedar and Russian olive. To establish riparian vegetation with minimal or no follow-up irrigation, to improve survival and growth rates, and to reduce long-term revegetation costs, the Los Lunas Plant Materials Center (LLPMC) has focused its efforts on developing new, deep planting techniques for use in riparian restoration in the Southwest.

Some of these disturbed sites have relatively deep water tables because flood control structures and flow regulation have altered the surface and ground water hydrology. On many of these sites, the natural regeneration of cottonwood floodplain forests can no longer occur due to the lack of overbank flooding events.

The establishment of obligate riparian woody plants (that is phreatophytic overstory trees and understory shrubs) requires either lengthy irrigation until the transplant's root system can extend into the permanent soil moisture above the water table (capillary fringe), or planting techniques that allow immediate or rapid root extension into this water source by utilizing deep planting methods.

The LLPMC began investigating deep planting methods over two decades ago with studies to improve planting methods for cottonwood and willow dormant pole cuttings. The influence of ground water depth relative to pole placement, salinity, and stock attributes were evaluated regarding establishment success.

The establishment of other important woody riparian species (particularly understory shrubs) has not been generally successful using pole cuttings. As a result, the LLPMC began producing riparian understory transplants in 30-inch deep pots (known as tallpots) about 10 years ago as a means to allow rapid root extension into the capillary fringe and minimize irrigation requirements.

Success rates of 90% or more were achieved in many situations where the lower portion of the root ball was placed in contact with the capillary fringe. If the top of the capillary fringe was just below the rootball, a few irrigations using embedded watering tubes placed in the planting hole provided deep soil moisture and allowed rapid root extension into the capillary fringe. If extreme conditions such as drought and/or moderately deep water tables were encountered, a maximum of three irrigations per year were applied for the first two years using the watering tubes.

In the last several years, the LLPMC has attempted to revegetate riparian sites that have fairly deep water tables where the bottom of a 30-inch root ball is still quite distant from the capillary fringe. Some initial trials with deep burial of tallpot stock in holes up to 6 feet deep showed positive results using transplants with stem heights of up to 6 feet and with total plant heights of 8½ feet. This approach violates several basic horticultural tenets which consider the deep burial of the root crown and the use of transplants with large shoot-to-root ratios as deleterious practices.

Samples of the first species planted using this technique [New Mexico olive (*Forestiera pubescens*), false indigo (*Amorpha fruticosa*), and false willow (*Baccharis salicina*)] were excavated after one or two growing seasons to ascertain the development of adventitious roots above the root ball. Impressive shoot growth and root observations indicate that the extension of roots into the capillary fringe had occurred as well as the development of adventitious roots in shallow soil horizons.

The success of these deep planting techniques seems reasonable considering that riparian species should be adapted to burial by sediments deposited by flood events, which is a common occurrence in properly functioning riparian systems.

As soon as it became apparent that deep planting of longstem planting stock might hold promise for improved establishment on sites with deeper water tables, the LLPMC tested the same procedure with one-gallon treepot (4"x4"x14") longstem stock. The expense and inconvenience of producing 30-inch tallpots makes treepots an attractive alternative stock type. Longstem treepots of the

Golden currant grown in 30-inch deep tallpots

New Mexico olive longstem stock in one-gallon treepots

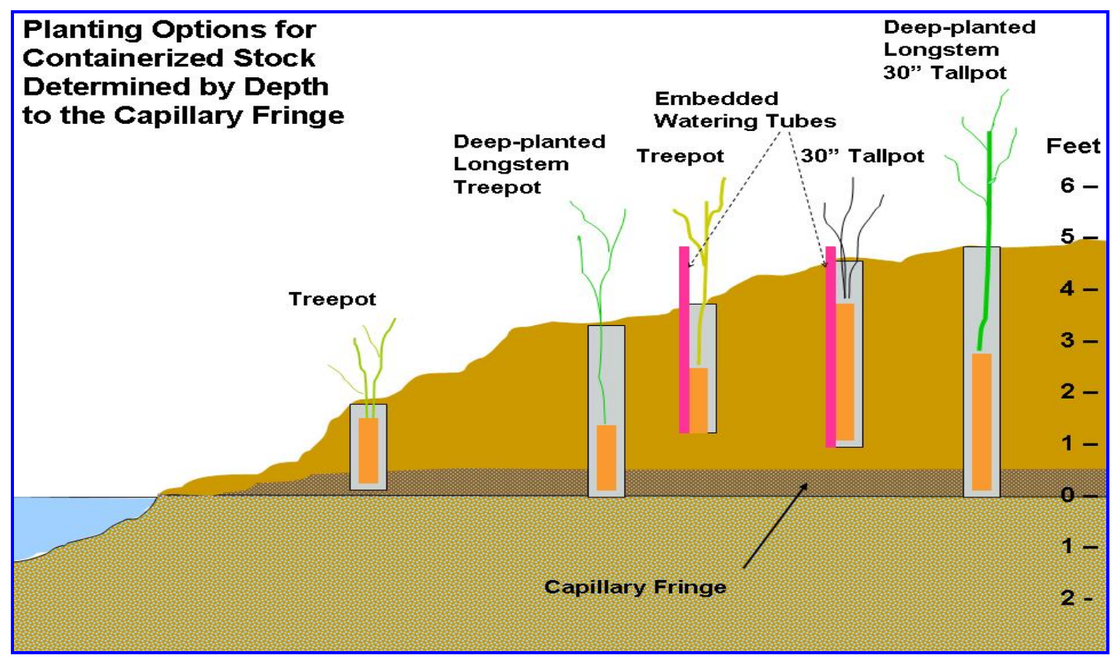

same three species previously mentioned were installed in later comparison plantings along with deep planted tallpot stock. Similar survival rates, growth rates, and adventitious root development were observed.

One advantage of producing a one-gallon, longstem treepot is it takes less time to grow than tallpot stock. Other advantages include an inexpensive container, ease of transplanting seedlings into the container, ease of watering and moving plants, and the simplicity of supporting and insulating treepots in the nursery. These efficiencies result in reducing the production cost of longstem treepots by at least 50% relative to tallpot stock.

GUIDELINES FOR DEEP PLANTING LONGSTEM STOCK

- If possible, insert the auger to the depth of the water table to disrupt any compacted zones that might restrict rapid root extension into the capillary fringe. Add enough backfill to the hole so the bottom portion of the root ball is in contact with the capillary fringe.
- Set the root ball to the desired depth and place a watering tube in the planting hole to allow deep irrigation if the water table declines or if a severe drought occurs.
- Backfill carefully around the root ball and stem to the ground surface. If sufficient water is available, thoroughly water the backfilled material immediately after planting. This is beneficial to collapse voids in the backfill and enhance soil-to-rootball contact.

Other species of the cottonwood floodplain forests that are amenable to longstem deep plantings include golden currant (*Ribes aureum*), screwbean mesquite (*Prosopis pubescens*) and skunkbush sumac (*Rhus trilobata*). We have recently tried this technique with tree species including netleaf hackberry (*Celtis reticulata*) and boxelder (*Acer negundo*), but it is too soon to evaluate success. Some understory riparian species are not amenable to this technique because of the difficulty in growing stock with long stems in containers; wolfberry (*Lycium torreyi*) is a prime example.

After the initial longstem deep burial trials were installed, we became aware of some restoration research from Australia that has taken a similar approach, and which they call "longstem tubestock." Their work acknowledges the longstem approach runs counter to conventional horticultural recommendations regarding deep burial and establishment of plants with long stems in small containers. Their approach uses smaller container sizes, 2"x5" forestry tubes, and attempts to produce stock with stem heights of 3 to 4 feet. Much of their deep planting has been in riparian environments, but they also have used this stock type for arid region plantings in areas with high salinity in surface soils as well as sand dune restoration.

The deep planting of longstem stock can preclude or drastically reduce the need to apply irrigation water to establish riparian shrubs and trees. The cost savings of minimal or no watering and high percentages of transplant success will in most situations, far outweigh the added expense of the planting stock and deep planting. If you are revegetating a riparian site that lacks overbank flooding and has a deep water table, contact the LLPMC to see if deep planting of longstem riparian species might work for your restoration project.

For additional information contact the Los Lunas Plant Materials Center at (505) 865-4684.

Inserting watering tubes into the planting hole next to the longstem plant

False willow established using deep-planted stock

Deep Planting

The Ground Water Connection

Guidelines for Planting Longstem Transplants for Riparian Restoration in the Southwest

NRCS Natural Resources Conservation Service

Plant Materials Program

The USDA is an equal opportunity provider and employer

Appendix G

Product Information for Certa-Lok™ Yelomine™
Restrained Joint PVC Pressure Piping System

CertainTeed

CERTA-LOK™ YELOMINE™

Restrained Joint PVC Pressure Piping System

Trenchless • Municipal • Mining • Irrigation

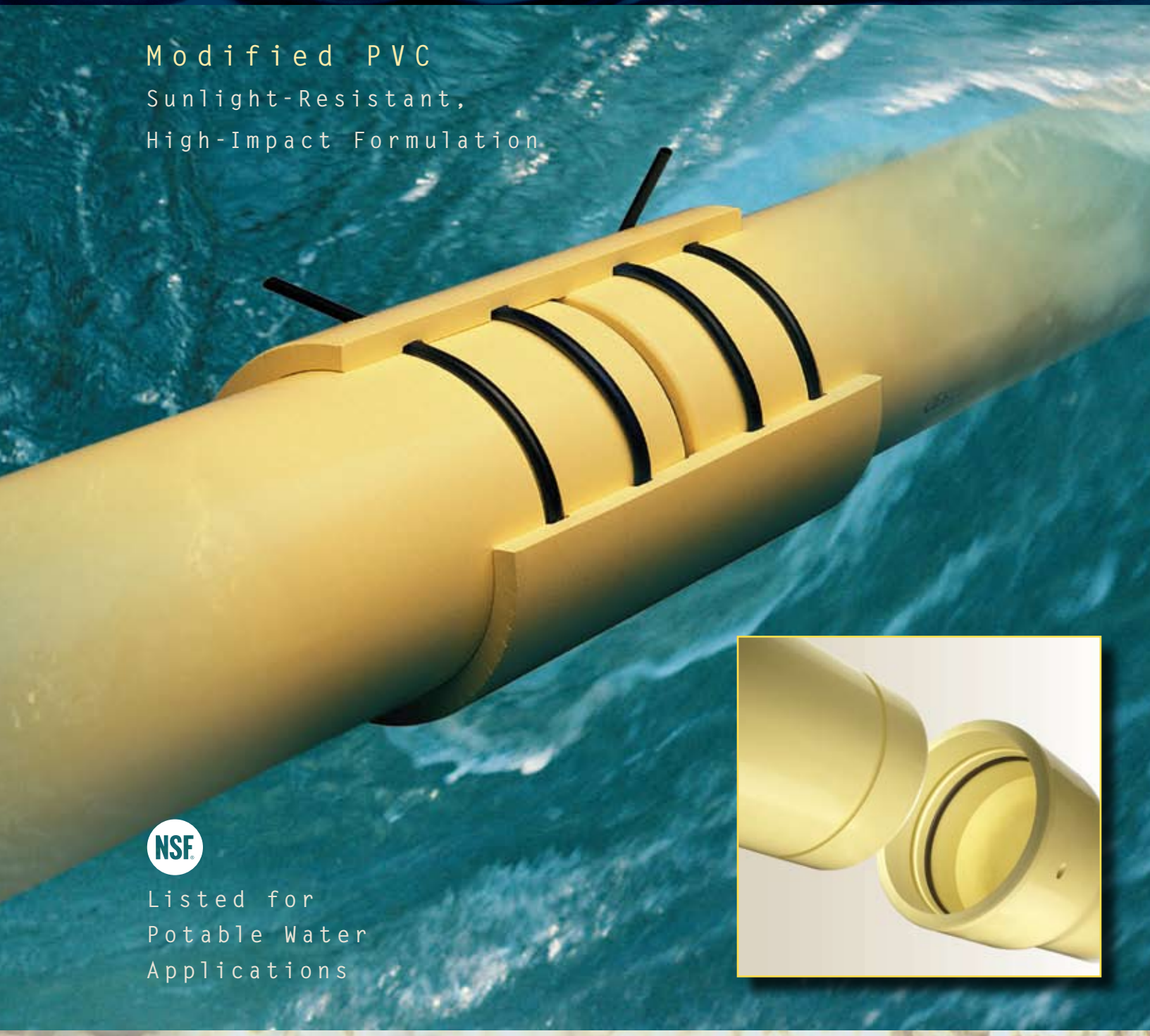

Modified PVC

Sunlight-Resistant,
High-Impact Formulation

NSF

Listed for
Potable Water
Applications

Certa-Lok™ Yelomine™

Restrained Joint PVC Pressure Piping System

FOR TRENCHLESS, MINING, INDUSTRIAL AND OTHER APPLICATIONS

Certa-Lok™ Yelomine™ is designed and engineered to meet your tough or restrained joint piping requirements. The Certa-Lok Yelomine piping system can provide a unique solution to many of your specialty and standard piping system needs, whether for temporary or permanent installations.

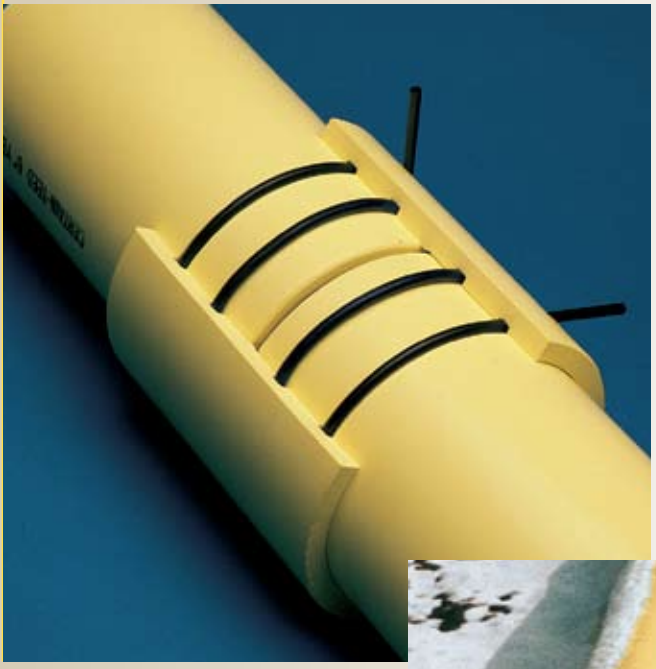

Certa-Lok Yelomine is performance proven for a broad range of piping applications.

The unique Certa-Lok Yelomine joining system and superior physical properties limit possible applications to only the imagination and ingenuity.

Certa-Lok Yelomine pipe and fittings are available in 2" through 16" diameters, in pressure classes of 125 to 315 psi. Low pressure (100 psi) pipe is also available – call for details. Certa-Lok Yelomine is manufactured with IPS outside diameters and is available in 20' laying lengths.

CertainTeed Certa-Lok Yelomine is manufactured from a specially formulated PVC compound that contains impact modifiers and UV (Ultraviolet) inhibitors. These modifiers and inhibitors provide higher impact strength over an extended period of time and allow Certa-Lok Yelomine to be used in above-ground, exposed applications as well as in underground or buried applications.

Only high-strength PVC compound having a minimum cell classification of 12454, as defined in ASTM D1784, is used in the production of Yelomine pipe and couplings.

The inherent properties of PVC provide a product that will not rust or corrode, and is extremely resistant to harsh environments, acids and most chemicals.

What Makes Certa-Lok Yelomine unique is its self-restraining joint.

Certa-Lok Yelomine pipe, couplings and fittings provide a restrained joint by utilizing precision-machined grooves on the pipe and in the coupling which, when aligned, allow a spline to be inserted, resulting in a fully circumferential restrained joint that locks the pipe and coupling together. A flexible elastomeric seal (O-ring) in the coupling provides a hydraulic pressure seal.

The Certa-Lok joint is fast, simple and reliable, and requires no solvent welding, butt fusion welding, bolting, wrenches, or specialty equipment to assemble. Assembled joints are strong and typically require no thrust blocking.

Certa-Lok Yelomine joints can be easily disassembled, allowing for system changes, extension, movement or reuse of the entire system.

CertainTeed offers a comprehensive line of Certa-Lok Yelomine fittings: change of direction (elbows, sweeps, tees), adapters to other materials, joining systems (flange adapters, threaded adapters, victaulic), service outlets (tapped couplings), and so on.

Certa-Lok Yelomine allows for easy field fabrication. When making field cuts, it is best to use a PVC pipe cutter to ensure a square cut end. Square cuts are essential to ensure proper alignment. A conventional saw or power saw may be used if a pipe cutter is not available. CertainTeed offers a power routing tool for field fabrication of the pipe groove required on Certa-Lok Yelomine. For cutting and grooving instructions, see 40-90-43, “Certa-Lok Yelomine Specifications and Dimensions.”

Applications

- Above-Ground Pressure Lines
- Buried Pressure Lines
- Bridge Crossings
- River & Creek Crossings
- Drip Irrigation
- Solid Set Irrigation
- Slurry Lines
- Supply Lines (Permanent)
- Supply Lines (Temporary)
- Trenchless
- Temporary Bypass
- Industrial Piping
- Process Piping
- Transmission Lines
- Lake and Pond Intake
- Dredging
- Acid Waste
- Tough Terrain
- Aeration Supply Lines
- Boat Dock Water & Sewer Lines
- Sewer Force Mains
- Unstable Soil Applications
- Oil Field Lead Lines
- Oil Field Salt Water Disposal
- Bridge & Highway Drainage
- Center Pivot Sprinkler Lines
- Fire Protection Lines
- Temporary Potable Water & Fire Supply Lines for Recreation Areas
- Leachate Collection
- Methane Gas Collection
- Road Crossings
- In-situ Mining Wells
- Heap-Leach Mining
- Vacuum Lines
- Dewatering Systems
- Effluent and Reclaimed Water Lines
- Emergency Water Systems

Non-Permanent Use and Permanent Use

CERTA-LOK JOINT

Certa-Lok Yelomine pipe and fittings have been successfully servicing the industry for many years. In order to enhance performance and better accommodate customer needs, CertainTeed offers two types of Certa-Lok Yelomine: Permanent Use and Non-Permanent Use. Both couplings are similar in design: the main difference is the O-ring supplied. Non-Permanent O-rings have a slightly reduced cross-section for easy assembly and disassembly. Permanent Use O-rings have a slightly larger cross-section and are not designed for disassembly. Both types of rings are Teflon®-coated. Permanent Use Certa-Lok Joints require lubricant to assemble, which is supplied in sufficient quantities by CertainTeed.

Yelomine IB trenchless installation

Non-Permanent Use Certa-Lok Joint

SIZES 2" THRU 16"

Non-Permanent Use Certa-Lok Joints are typically used in above-ground, exposed installations, such as mining, irrigation, temporary bypass or slurry lines, or any installation that requires disassembly and reuse.

CAUTION: *Non-Permanent Use Certa-Lok Joints should not be used in buried or submerged applications.*

Permanent Use Certa-Lok Joint

SIZES 2" THRU 16"

Permanent Use Certa-Lok Joints utilize an O-ring with a slightly larger cross-section. The joint assembles easily with lubricant. Disassembly can be achieved, but can be extremely difficult depending on the diameter of the piping system.

Permanent Use Certa-Lok Joints are intended for use in all installations that do not require disassembly during the service life of the system. Applications include buried installations, bridge, river and road crossings, and all installations that would expose joints to long-term or excessive misalignment due to external loads. CertainTeed supplies sufficient lubricant for Permanent Use Certa-Lok Joint installations.

If in doubt as to which system, Non-Permanent or Permanent Use, is best suited for your application, contact your local CertainTeed distributor or CertainTeed Territory Sales Manager.

WARNING: *Under no circumstances is Certa-Lok Yelomine to be used for pressurized air or gas handling. Sudden release of stored energy in a compressible fluid can result in catastrophic failure.*

Certa-Lok Yelomine

Fundamental Features and Advantages

Impact Strength

Certa-Lok Yelomine greatly exceeds the impact strength of conventional PVC. Impact strength tests are regularly made on the product in accordance with ASTM standard test method D 2444. **Average impact values are up to five times greater than the impact resistance of conventional PVC pipe.**

CertainTeed Impact Production Specifications

Impact Strength, ft.- lbs.

NOM. SIZE	SDR 32.5	SDR 26	SDR 21	SDR 17	Std. Pipe (ALL SDR'S)
2"	--	--	--	170	30
3"	--	--	--	245	60
4"	--	210	255	320	90
6"	250	305	380	470	120
8"	300	400	495	610	160
10"	350	500	530	--	160
12"	400	500	530	--	160

NSF Approved

Yelomine is designed and manufactured in accordance with ASTM D2241. 2" through 16" PVC pipe and couplings up to Class 250 are listed in NSF Standard 14, "Plastic Piping System Components and Related Materials" for performance. All other products have a potable water listing in accordance with NSF61.

PVC Temperature Service Factor

All pressure ratings for PVC pipe are determined in a water environment of 73.4°F (±3.6°F). As the temperature of the environment increases, PVC pipe becomes more ductile. This can be represented by graphs that show that the impact strength increases and the tensile strength decreases as the temperature rises. Because of this effect, the pressure rating of the pipe must be decreased to allow for safe operation of the line at elevated temperatures.

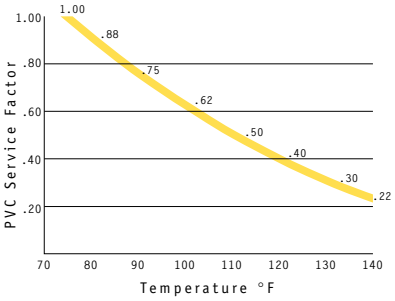

PVC Pipe Pressure Ratings for temperatures from 73.4°F to 140°F (For pressure rating at a temperature above 73.4°F, multiply the rating at 73.4°F by the corresponding service factor from the graph).

Non-Corrosive/ Chemical Resistant

Certa-Lok Yelomine is an excellent product for harsh environments. The inherent properties of PVC provide a product that is a non-conductor, which will not rust or corrode. Certa-Lok Yelomine is a product that does not require any cathodic protection, coating, wraps or other corrosion protection. PVC is extremely resistant to acids and most chemicals, and is unaffected by "hot" (aggressive) soils. Certa-Lok Yelomine has outstanding resistance to scale and scale build up. And, if necessary, it can be cleaned by pigging the line.

Special splines and O-rings may be required in either extremely acidic applications or hydrocarbon environments.

High Flow Rate

Certa-Lok Yelomine offers a smooth, non-wettable interior surface that accounts for a Hazen-Williams flow coefficient of C=150.

Light Weight

Two-inch Certa-Lok Yelomine weighs less than one pound per foot; 12" diameter (SDR26) weighs only 13 pounds per foot. This means most pipe sizes can be easily handled manually, even in 20' lengths, thus eliminating the need for heavy lifting equipment, and providing the ability to get into hard-to-reach areas like those found in coal mines and tunnels.

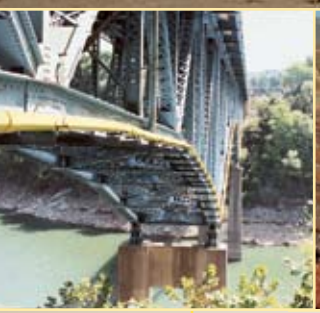

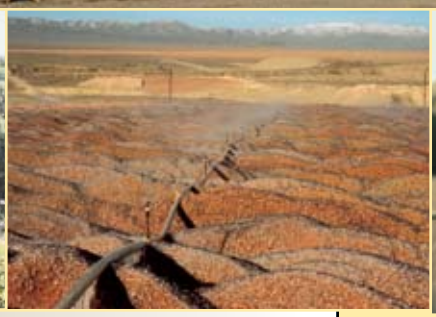

Support Spacing for Above-Ground Applications

No Thrust Blocking Required

Certa-Lok Yelomine does not typically require thrust blocking for support, due to its restrained joint design.

When adapting to other piping systems, such as victaulic, metal pipe or non-restrained joints, use of thrust blocking is necessary. Also, connections to valves, pumps, pressure regulators and other appurtenances may require normal thrust blocking.

Flexibility

Certa-Lok Yelomine can bend easily around many obstructions, typically reducing the number of fittings required. Pipe *must not* be bent to a lesser (tighter) radius than shown below.

Nom. Size	Minimum Radius of Curvature (feet)*	Offset per 20' length (inches)*
2"	60	40
3"	90	27
4"	100	24
6"	150	16
8"	200	12
10"	250	10
12"	300	8
16"	400	6

*Pressure applications (non-tapped pipe)

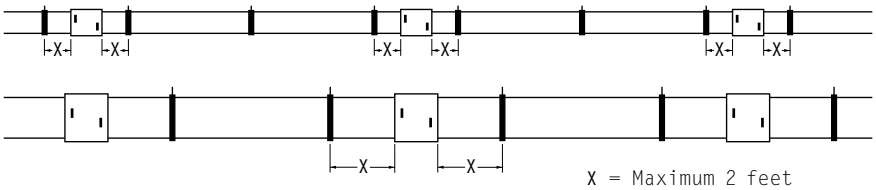

In some above-ground applications, Certa-Lok Yelomine is suspended on hangers, brackets or other supports. Proper bearing and spacing of supports is necessary to prevent excessive bending or sagging.

Supports must provide a smooth bearing surface conforming to the contour of the bottom half of the pipe. Bearing surfaces must be a minimum of 2" wide. Supports must permit longitudinal pipe movement for expansion and contraction, and must be mounted in such a way as to prevent lateral or vertical pipe movement. It is recommended that a support be secured to the pipe on both sides of a joint in order to minimize load on the joint, with the spacing between support and joint not to exceed 2 feet. The table can be used as a guide in determining hanger spacing and weight to be suspended.

Support Spacing for Suspended Pipe

SIZE	SUPPORT SPACING
2"- 4"	4' - 8'
6"	7' - 10'
8"- 16"	8' - 17'

General guidelines only; consult the Uni-Bell *Handbook of PVC Pipe Design and Construction* for specific recommendations.

Dimensions

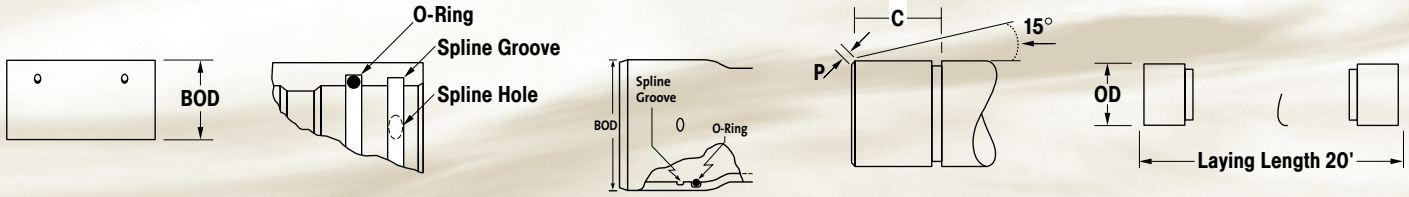

Yelomine Integral Bell (IB) Piping Products

O-ring and Spline included

Size	PSI Rating	SDR	O.D.	BOD	P	C	Min. Wall	Weight Lbs/ft	Part No. ①
4"	200	21	4.500	5.11	.156	3.00	.214	1.89	266225
4"	250	17	4.500	5.27	.156	3.00	.265	2.29	266218
6"	200	21	6.625	7.50	.219	3.00	.316	4.07	266249
6"	250	17	6.625	7.74	.219	3.00	.390	4.94	266232
8"	200	21	8.625	9.75	.656	3.16	.410	6.72	266379

Certa-Lok Yelomine Pipe with Couplings

Certa-Lok Coupling, O-ring and Spline Included ②

Size	PSI Rating	SDR	O.D.	BOD	P	C	Min. Wall	Weight Lbs/ft	Part No. ①②
2"	250	17	2.375	3.20	.188	1.75	.140	0.69	216213
3"	250	17	3.500	4.38	.188	2.50	.206	1.48	217210
4"	200	21	4.500	5.47	.188	3.00	.214	2.11	226212
4"	250	17	4.500	5.47	.188	3.00	.265	2.50	218217
4" HP	315	13.5	4.500	5.96	.188	3.00	.333	3.10	250217
6"	125	32.5	6.625	7.84	.313	3.00	.204	2.99	243219
6"	160	26	6.625	7.84	.313	3.00	.255	3.58	235214
6"	200	21	6.625	7.84	.313	3.00	.316	4.30	227219
6"	250	17	6.625	7.84	.313	3.00	.390	5.18	219214
6" HP	315	13.5	6.625	8.37	.313	3.00	.491	6.59	251214
8"	125	32.5	8.625	10.19	.656	3.16	.265	5.00	244216
8"	160	26	8.625	10.19	.656	3.16	.332	6.07	236211
8"	200	21	8.625	10.19	.656	3.16	.410	7.26	228216
8"	250	17	8.625	10.95	.656	3.16	.508	8.71	220210
8" HP	315	13.5	8.625	10.95	.656	3.16	.639	11.30	237218
10"	125	32.5	10.750	12.44	.656	3.50	.331	7.97	245213
10"	160	26	10.750	12.44	.656	3.50	.413	9.73	214219
10"	200	21	10.750	12.44	.656	3.50	.511	11.60	230219
12"	125	32.5	12.750	14.65	.656	3.50	.392	11.11	246210
12"	160	26	12.750	14.65	.656	3.63	.490	13.63	215223
12"	200	21	12.750	14.65	.656	3.63	.606	16.21	239229
16"	90 ③	26	16.000	17.40	.656	3.61	.615	20.37	248214 ④
16"	160	26	16.000	17.22	.656	3.61	.615	20.22	248214 ④
16"	200	21	16.000	17.22	.656	3.61	.762	24.85	248337

HP = High Pressure

Note: All dimensions are in inches and are subject to normal manufacturing tolerances.

① Specify Permanent or Non-Permanent.

② Pipe may also be purchased without couplings, if desired. Use same part number, and specify "Pipe Only" on P.O.

③ PSI on this item is limited by the pressure rating of the coupling.

④ Specify desired pressure rating on P.O.

Joint Assembly

Clean

Clean interior of coupling and pipe spigot. Use a clean rag or paper towel to remove all foreign material. Make sure gaskets are clean and evenly seated in the gasket groove.

Lubrication

Lubrication is typically not required on Non-Permanent Use Certa-Lok Yelomine Joints up to 6" in diameter.

Lubrication is required on all Permanent Use Certa-Lok Yelomine Joints, and all non-permanent sizes above 6".

CertainTeed supplies sufficient lubricant to join the pipe. Use only approved lubricant supplied by CertainTeed.

CAUTION: Lubricants not specifically formulated for this purpose may deteriorate the pipe and/or the gasket.

When using lubricant, apply only to the exposed gasket surface and to the tapered end of the pipe. Do not apply lubricant to the pipe or coupling spline grooves or spline. Lubricant in these areas can reduce joint strength.

Assembly

After applying lubricant, align the pipe and coupling and push the pipe into the coupling. When the pipe end seats against the stop in the coupling, spline grooves are automatically aligned for spline insertion. Use a bar and block if needed; a “Comealong” or puller also can be used if sufficient care is taken to protect the pipe from chains.

The spline is then inserted through the spline insertion hole in the coupling and into the aligned grooves, until it has traveled a full 360° and is seated against itself (CertainTeed offers a spline insertion tool that may be helpful, especially in larger pipe sizes).

The spline securely locks the coupling to the pipe. The gasket in the coupling is designed to provide a hydraulic seal. Note: If needed, the joint can be disassembled and re-used to allow for system changes, extension or removal for re-use.

FPO FSC
Mixed Sources
Product group from well-managed forests, controlled sources and recycled wood or fiber
www.fsc.org Cert no. XXX-XXX-000
© 1996 Forest Stewardship Council

ASK ABOUT OUR OTHER CERTAINTEED PRODUCTS AND SYSTEMS:

EXTERIOR: ROOFING • SIDING • WINDOWS • FENCE • RAILING • TRIM • DECKING • FOUNDATIONS • PIPE
INTERIOR: INSULATION • GYPSUM • CEILINGS

CertainTeed Corporation
P.O. Box 860
Valley Forge, PA 19482

Telephone: 866-CT4-PIPE (866-284-7473)
Fax: 610-254-5428
www.certainteed.com

40-90-45E © 6/08 CertainTeed Corporation, Printed in U.S.A.

Appendix H

Product Information for Landscape Dripline

RAIN BIRD®

TECH SPECS

Landscape Dripline

Introducing the Next Generation of Inline Tubing

Next Generation Technology Delivers Unmatched Performance

Rain Bird® Landscape Dripline is the next generation in pressure-compensating, inline emitter tubing. It delivers unmatched clog-resistance for long-term reliability. When you combine Landscape Dripline with Rain Bird's comprehensive line of Turf and Xerigation® drip products, you'll have the peace of mind and confidence that can only come from specifying and/or installing a complete Rain Bird irrigation system.

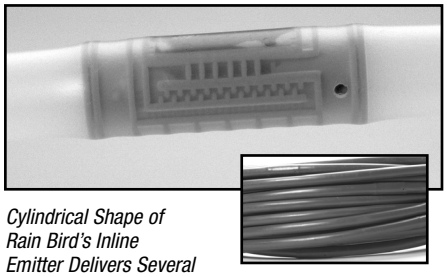

Cylindrical Shape of Rain Bird's Inline Emitter Delivers Several Significant Performance Advantages.

Friction Loss Characteristics LD16-00 Tubing

Flow (GPM)	Flow (GPH)	Velocity (FPS)	PSI Loss Per 100'
0.50	30	0.70	0.27
1.00	60	1.40	0.97
1.50	90	2.10	2.05
2.00	120	2.80	3.50
2.50	150	3.50	5.29
3.00	180	4.20	7.42
3.50	210	4.90	9.87
4.00	240	5.60	12.64
5.00	300	7.00	19.11
6.00	360	8.41	26.78
7.00	420	9.81	35.63

Features

- Pressure compensation ensures consistent flow from each inline emitter throughout the entire length of the tubing run.
- Choice of flows, spacing and coil lengths provides design flexibility.
- Rain Bird's patented (Advanced Drip Inline) ADI emitter pressure compensates by lengthening the emitter's turbulent flow path instead of reducing the cross-sectional area. The result is unsurpassed clog-resistance.
- Cylindrical shape of Rain Bird's ADI emitter welds to the inner circumference of the polyethylene tubing, creating a physical barrier that keeps the emitter cover and silicone wafer securely in place even if the tubing is kinked.
- Cylindrical design of Rain Bird's ADI emitter provides surface area for filtration throughout 360° of its outer circumference.
- Dual inlets are positioned 180° apart from each other to insure that at least one inlet is always clear of debris along the bottom of the tube.
- The dual outlet ports on every Rain Bird inline emitter act in combination as a micro air relief valve. Dual ports insure that one outlet is always clear of the dirt, reducing the chance of debris being sucked back into the emitter once the system is shut down.
- Blank Landscape Dripline Tubing, is available for connecting tubing grid to tubing grid. Since our Blank Tubing uses the same fittings as our LD Tubing, construction of grid headers and exhaust headers is quicker and easier.
- The brown color of Landscape Dripline blends in with the non-turf landscape and/or mulch.

Operating Range

Pressure:
8-60 psi (0,6 – 4,0 Bars)

Temperature:
Up to 110°F (43.3°C) water
Up to 125°F (51.7°C) ambient

Flow Rates:
0.6 and 0.9 GPH
(2,3 and 3,5 lph)

Filtration:
120 Mesh (125 Microns)

Tubing Dimensions

Outside Diameter: 0.630" (16 mm)

Inside Diameter: 0.540" (13,8 mm)

Wall Thickness: 0.045" (1,1 mm)

How to Specify/Order:

Landscape Dripline Tubing

LD-09-12-100

Model
Landscape Dripline

Flow Rate
06 = .6 GPH (2,3 lph)
09 = .9 GPH (3,5 lph)

Emitter Spacing
12 = 12" (30,5 cm)
18 = 18" (45,7 cm)
24 = 24" (61,0 cm)

Length of Tubing
100 = 100' (30,5 m)
500 = 500' (152,4 m)

Blank LD Tubing

LD16-00-100

Model
Landscape Dripline 16 mm

Flow Rate
No Flow Blank Tubing

Length of Tubing
100 = 100' (30,5 m)
500 = 500' (152,4 m)

Pressure Compensation Without Reducing Size Of Emitter Flow Path

Rain Bird's Landscape Dripline pressure compensates unlike any other inline tubing in the world. Using its patented ADI (Advanced Drip Inline) technology, pressure compensation is accomplished without ever reducing the cross-sectional area of the emitter flow path. That means the size of the flow path never gets smaller as the pressure increases. At higher pressures, the cross-sectional area of Rain Bird's ADI emitter flow path is nearly ten times greater than the cross-sectional area of other commonly specified pressure-compensating inline emitters.

Anatomy of a Clog-resistant Inline Emitter.

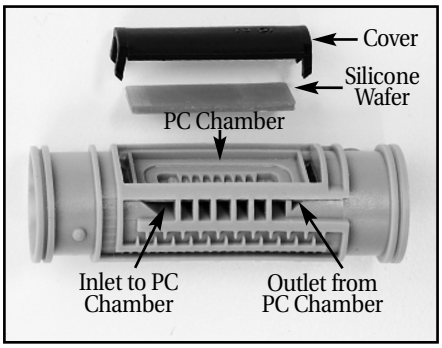

How the ADI Emitter Works

At pressures under 8 psi, Rain Bird's ADI emitter is in the self-flush mode. Water flows freely around and through the labyrinth inside the pressure-compensating chamber of the emitter. Any contaminant inside the emitter is flushed through the emitter outlets. This self-flushing mode occurs at the beginning and at the end of every watering cycle to assure long-term reliability.

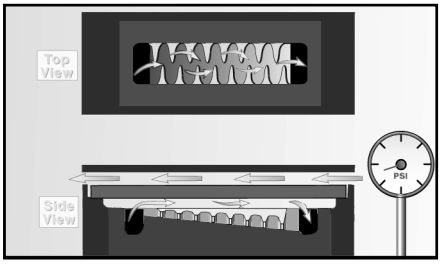

Self-Flushing Mode

Patented ADI Technology "Lengthens" Flow Path

As the pressure increases, the silicone membrane in the ADI emitter's pressure-compensating chamber begins to compress against the emitter's sloped labyrinth which is also located inside the emitter's pressure-compensating chamber. This compression "lengthens" the torturous path through which the water must pass by channeling the water through more and more of the sloped labyrinth as the pressure increases.

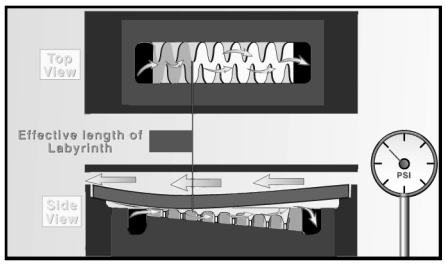

Compensation Mode At Lower Pressures

At Higher Pressures, ADI Technology "Lengthens" Flow Path Even More

As the pressure continues to increase, the silicone membrane continues to compress longitudinally against the emitter's sloped labyrinth. This forces the water to pass through more of the labyrinth. As the water travels through this "lengthened" torturous flow path, a metered pressure drop is created that results in pressure compensation from 8-60 psi. Because the cross-sectional area of the flow path is never reduced, the ADI emitter's flow path has a cross-sectional area that is nearly ten times greater than that of a conventional pressure-compensating inline emitter. The benefit? Increased clog-resistance over the long term.

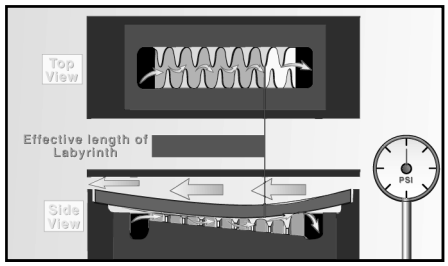

Compensation Mode At Higher Pressures

Cylindrical Emitter Design Delivers Unique Advantages

The shape of Rain Bird's ADI emitter is cylindrical. This means the ADI emitter can be "welded" securely in place to the inner circumference of the polyethylene tubing via a physical barrier over the ADI emitter cover. Should the inline tubing be inadvertently kinked in the field during installation, the cover and wafer won't be dislodged the way the covers and wafers of conventional inline emitters can be dislodged.

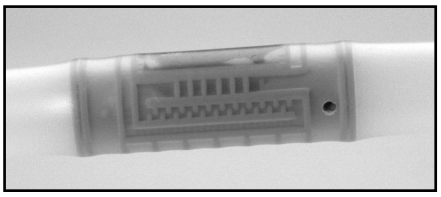

More Emitter Surface Area Means More Filtration Area

Another advantage to the cylindrical shape is increased surface area. By its very geometry, the ADI emitter has much greater surface area than a conventional inline emitter. This additional surface area, when used for filtration, means longer term clog-resistance. Whether there's a break in the line, an unforeseen problem with the main filter or just an unusually high presence of sediment; more filtration surface area provides better protection. And with Rain Bird's Landscape Dripline, each ADI emitter provides more than five times the filtration area of conventional inline emitters.

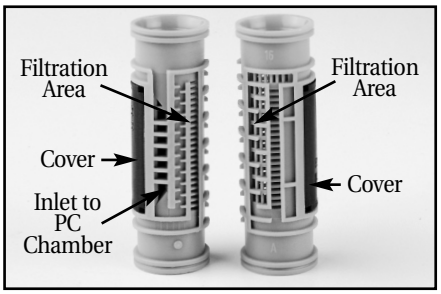

Greater Surface Area Means More Filtration

Landscape Dripline Maximum Lateral Lengths

	Maximum Lateral Length (Feet)					
Nominal Flow (GPH)	0.6	0.9	0.6	0.9	0.6	0.9
PSI	12" Spacing		18" Spacing		24" Spacing	
10	125	96	175	135	218	171
20	249	191	350	171	442	340
30	307	236	434	333	550	422
40	350	268	495	380	627	481
50	385	294	544	417	689	529
60	414	317	586	449	743	570

Note: Data assumes a minimum 8.5 PSI at end of lateral and no slope.

	Maximum Lateral Length (Meters)					
Nominal Flow (l/h)	2,3	3,4	2,3	3,4	2,3	3,4
Bars	30,5 cm		45,7 cm		61 cm	
0,7	38,1	29,3	53,3	41,1	66,4	52,1
1,0	55,1	42,3	77,4	46,1	97,2	75,3
1,5	79,0	60,6	111,2	60,8	140,5	108,0
2,0	91,8	70,6	129,8	96,6	164,4	126,2
2,5	101,8	78,0	143,9	110,5	182,3	139,9
3,0	110,4	84,5	156,1	119,8	197,8	151,8
3,5	118,0	90,2	166,8	127,9	211,3	162,2
4,0	124,4	95,2	176,1	134,9	223,2	171,3
4,1	126,2	96,6	178,6	136,9	226,5	173,7

Note: Data assumes a minimum 0,6 Bars at end of lateral and no slope.

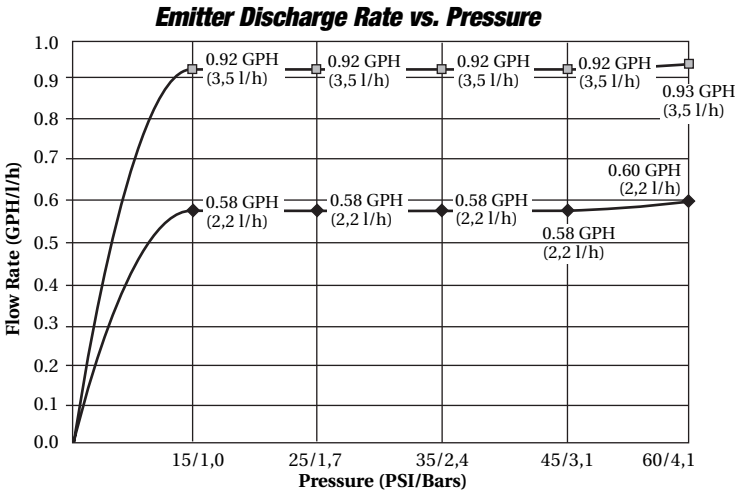

Why Conventional Inline Tubing Needs An Automatic Flush Valve

The use of conventional inline tubing often requires the installation of an automatic flush valve to ensure that the water in the inline tubing drains out after each watering cycle. While this is not an efficient use of water, it is necessary to keep sediment or suspended contaminants from depositing onto the inlet filters of conventional inline emitters.

Inline emitters can end up on the bottom side of the tubing. When the watering cycle ends, the flow of water stops. Then any sediment or suspended contaminants in the water begin to settle onto the inline emitters on the bottom of the tubing.

This increases the likelihood of clogging. That's why an automatic flush valve is recommended when installing conventional inline emitter tubing; to keep the water flowing and the sediment and suspended contaminants from settling and clogging emitter inlets.

Use Landscape Dripline Without An Automatic Flush Valve

Rain Bird's ADI emitter is cylindrical in shape and it has filtration throughout its 360° circumference. This means water can always be pulled into the Rain Bird inline emitter from the cleanest, uppermost area of the tubing flow path. Therefore, there is no need for an automatic flush valve – saving water, installation time and money.

Dual Outlet Ports

The cylindrical design of Rain Bird's ADI emitter also allows for a second emitter outlet port to be located 90° from the first outlet port. This second port serves as a built-in, mini air relief valve to assure that if one port is oriented directly toward the ground, the other port is not. This significantly reduces the chance for emitters clogging due to debris being back-siphoned into the emitter.

Filtration

Landscape Dripline requires 120-mesh (125-micron) filtration. For completely automatic flushing, select Rain Bird's Automatic Filter Kit (AF Series). It features a dual action cleaning system that virtually eliminates manual filter maintenance.

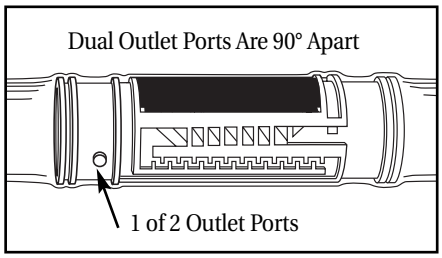

Insert, Compression or Spin-Loc Fittings

Choose either Rain Bird LD16 Series insert fittings, Rain Bird 600 Series compression fittings, or Rain Bird Spin-Loc fittings for your landscape dripline installation.

Insert fittings are good to 45 psi (3,1 Bars) without clamps, while compression and Spin-Loc fittings are good to 60 psi (4,1 Bars) without clamps.

Use of Inline Tubing On The Increase

The use of inline tubing applications is on the increase. This is due, in part, to an increased focus on water conservation. But it is also due to a growing awareness of the benefits that derive from using landscape drip products. Where it is imperative to keep overhead water off streets, walls, walkways and windows, the use of Landscape Dripline can make a significant contribution to the irrigation design without compromising the landscape.

Rain Bird Landscape Dripline Tubing

The flexible polyethylene tubing shall have factory installed, pressure-compensating, inline emitters installed every _____ inches. The flow rate from each installed inline emitter shall be a consistent _____ gallons per hour when inlet pressure is between 8 and 60 psi.

Pressure compensation shall be accomplished through the effective lengthening of the emitter flow path. This method of pressure compensation shall in no way reduce the size of the cross-sectional area of the emitter flow path. As a result, superior clog-resistance shall be achieved.

The inline emitter's cylindrical shape shall permit the welding of the emitter to the inner circumference of the polyethylene tubing. This shall create a physical barrier that keeps the cover of the inline emitter securely in place making it impossible to dislodge the emitter cover, or the silicone wafer beneath it, when the polyethylene tubing is kinked. This, in turn, shall assure consistent flow from each inline emitter throughout the line.

The inline emitter's cylindrical shape shall provide surface area for filtration throughout 360° of its outer circumference. This increased filtration surface area shall assure that the water that enters the inline emitter can always come from the upper half, or cleanest part of the flow path in the polyethylene tubing regardless of how the inline tubing lays on the ground. This shall make it unnecessary to install an automatic flush valve on the system to drain the inline tubing after each watering cycle thereby saving significant water during system operation.

The inline emitter shall also have dual outlet ports, ensuring that only one port ever has direct contact with the ground when the polyethylene tubing is installed at grade and mulched over. The Landscape Dripline inline tubing shall be supplied by Rain Bird Sprinkler Mfg. Corp., Glendora, California.

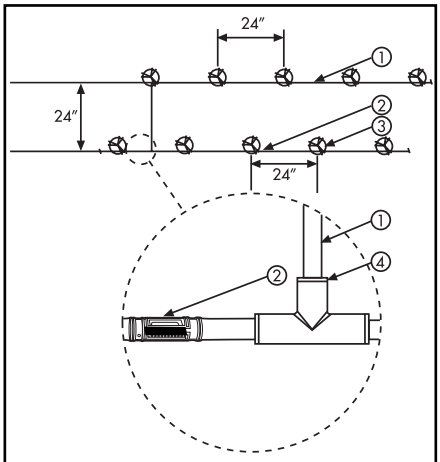

1. Landscape Dripline Pressure-Compensating Inline Tubing LD-09-24-500
2. Emitter (Pre-installed) In Tubing
3. Plant Material
4. Compression Tee (600 Series)

Other Products Useful in the Design of a Landscape Dripline System

Automatic Filter Kits
AF100-LSS, SC100-200-SS: 1" Automatic Filter Kit 200 Mesh
AF150-LSS, SC100-200-SS: 1 ½" Automatic Filter Kit 200 Mesh
AF200-LSS, SC100-200-SS: 2" Automatic Filter Kit 200 Mesh

Xerigation Control Zones
XCZ-075: Complete ¾" Control Zone For Drip
XACZ-075: ¾" Anti-Siphon Control Zone For Drip
XCZ-100: Complete 1" Control Zone For Drip
XCZ-100 COM: Complete 1" Commercial Control Zone For Drip

Loc Fittings
LOC 16mm 050 MPT adapter
LOC 16mm 075 MPT adapter
LOC 16mm Tee
LOC 16mm Elbow
LOC 16mm Coupling

Universal Fittings
Univ Tee
Univ Elbow
Univ Coupling

Landscape Dripline Compression Fittings

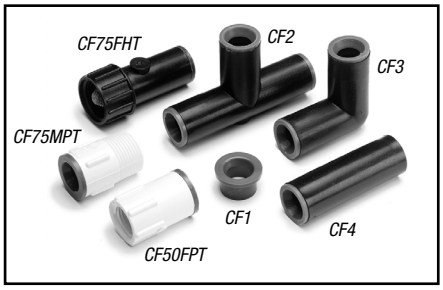

600CF1: Compression Adapter
600CF2: Compression Tee
600CF3: Compression Ell
600CF4: Compression Coupling
600CF50FPT: Compression x ½" FPT
600CF75FHT: Compression x ¾" FHT
600CF75MPT: Compression x ¾" MPT Male
600CF700RC: Reducing Compression Coupling (Not Shown)
700CF22: Figure-8 End Closure (Not Shown)

Landscape Dripline Insert Fittings

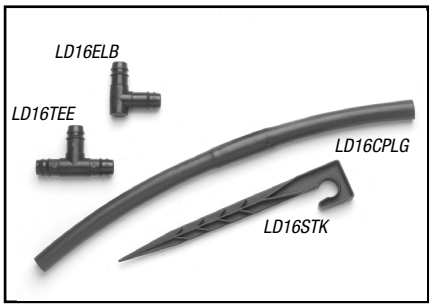

LD16CPLG: Barb x Barb Coupling
LD16ELB: Barb x Barb Ell
LD16TEE: Barb x Barb Tee
LD16STK: 7 ¾" Barbed Tubing Stake Plastic

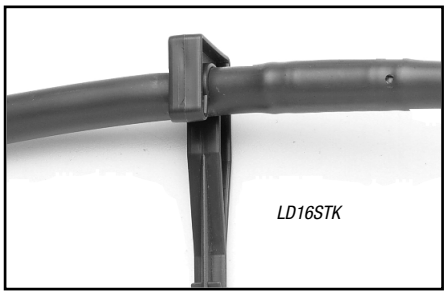

Tubing snaps into stake.

Rain Bird Corporation
970 West Sierra Madre Avenue, Azusa, CA 91702
Phone: (626) 963-9311 Fax: (626) 812-3411

Rain Bird International, Inc.
145 North Grand Avenue, Glendora, CA 91741
Phone: (626) 963-9311 Fax: (626) 963-4287

Rain Bird Technical Services
(800) 247-3782 (U.S. only)

Specification Hotline
800-458-3005 (U.S. only)

www.rainbird.com

C *Recycled Paper.*
Rain Bird. Conserving More Than Water.

® Registered Trademark of Rain Bird Sprinkler Mfg. Corp.
© 2001 Rain Bird Sprinkler Mfg. Corp. 01/01

D39185E